amateur radio

AUGUST, 1972

Registered at G.P.O., Melbourne, for transmission by post as a periodical Category "B"

Price 40 Cents

JOURNAL OF THE WIRELESS INSTITUTE OF AUSTRALIA

SILVER JUBILEE

R.D. CONTEST

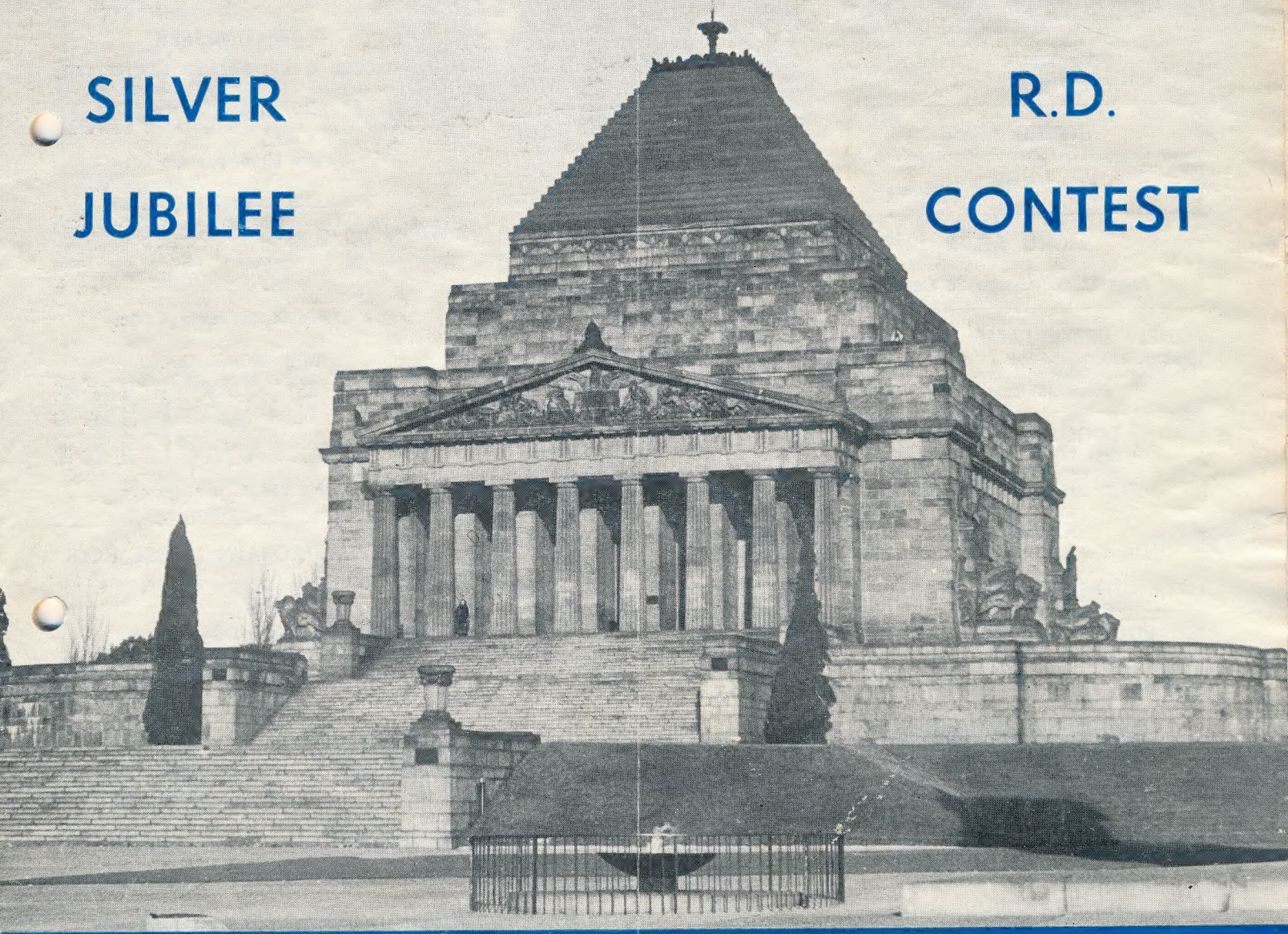

The "Wipertator"

Multi-Band Antenna

TCA 1649 on FM

VK-ZL Contest Rules

Direct Keying

2 Mx FM Allocations

METERS

MO65 0-5 mA.	$3.50
MO65 100 mV.	$3.40
MO65 50 mV.	$3.40
MR2P 1,000 volt DC	$3.50
MR52 5 mA.	$3.50
MR2P 100 mA.	$3.40
P25 0-10 mA.	$3.50
P22 500 uA.	$4.00

Postage 40 Cents

"REALISTIC" DX150 SOLID STATE COMM. RECEIVER

Four bands covering 535 kHz. to 30 MHz., fully transistorised, SW/CW/SSB/AM boardcast. 240v. a.c. or 12v. d.c. operation. Product detector for SSB/CW plus fast and slow a.v.c.; variable pitch b.f.o.; illuminated electrical bandspread, fully calibrated for Amateur bands, cascode r.f. stage; a.n.l. for r.f. and a.f.; zener stabilised; o.t.l. audio; illuminated S meter; built-in monitor speaker.

Price $234.20 incl. tax

Matching speaker to suit, **$13.60**

STEREO ARMS

New, complete with Ceramic Cartridge with balance weight.

Price $5.75, postage 30 Cents

MONO ARMS

Complete with Cartridge.

Price $3.00, postage 30 Cents

NEW BEZEL LAMP HOLDERS

Complete with 6-volt globes. Colours: Red, Green, White, Orange, Blue or Lemon.

Price 58 Cents each

TOGGLE SWITCHES

New DPDT Toggle Switches—C/OFF/L/R 10 amp. 125 volt or 5 amp. 240 volt ratings.

Price $2.20, postage free

RESISTORS

Poly Pack of 100 Resistors. 33 values of ½ and 1 watt rating.

Price $2.00, post paid

POCKET CRYSTAL RADIO

Type ER22. Set complete. **Price $1.50.**

VALVES

1AX2	$3.52	6DQ6A	$2.65
1B3GT (DY30)	1.77	6DT6	1.61
1F5G	1.50	6DX8 (ECL84)	1.93
1R5 (DK91)	2.25	6EH7 (EF183)	1.84
1S2 (DY86)	1.77	6EJ7 (EF184)	1.84
1S4 (DL91)	3.64	6EM5	1.62
1S5 (DAF91)	2.13	6ES6 (EF97)	2.25
1T4 (DF91)	2.13	6G8G	3.06
1U4	2.13	6GV8 (ECL85)	2.05
5AS4	1.61	6GW8 (EC186)	2.05
5U4G/B	1.61	6H6G/T	0.50
5X4G	2.82	6K8	3.99
5Y3GT	1.38	6K8G/T	3.41
5Z3	2.82	6L6	5.85
6AB7	4.11	6M5 (EL80)	1.53
6AC7	0.50	6N3 (EY82)	1.32
6AG5	0.50	6N7GT	3.99
6AJ8 (ECH81)	2.37	6Q7G/T	2.94
6AK5 (EF95)	1.80	6S2 (EY86)	2.25
6AL3 (EY88)	1.84	6S4/A	2.32
6AL5 (EAA91)	1.39	6SJ7	0.75
6AM5 (EL91)	2.37	6SL7GT	3.18
6AM6 (EF91)	2.28	6SQ7	3.18
6AN7A (ECH80)	1.90	6U7G	0.75
6AN8	3.06	6V4	1.10
6AR7GT	2.28	6V6	3.64
6AU4GT/A	1.84	6X2 (EY51)	2.40
6AU6	1.61	6X9 (ECF200)	2.09
6AU7	2.87	6Y6G	3.18
6AU8	3.06	6Y9 (EFL200)	2.30
6AV6	1.35	12AT7 (ECC81)	0.75
6AW8A	1.93	12AU6	1.78
6AX4GT	1.84	12AU7A (ECC82)	1.72
6B8	3.88	12AX7 (ECC83)	1.95
6BD7 (EBC80)	1.30	12BE6	2.02
6BE6 (EK90)	1.68	12SN7GT	3.18
6BH5	1.61	16A5	2.15
6BV7	1.61	16A8 (PCL82)	2.46
6BW6	2.25	17Z3 (PY81)	2.25
6BW7	2.28	30	0.50
6BX6 (EF80)	1.61	KT66	6.20
6BZ6	1.61	KT88	7.05
6CA7 (EL34)	3.58	6146 (QV06-20)	7.29
6CM5 (EL36)	2.65	OA2/150C2-4	1.46
6CQ6 (EF92)	2.59	QV03-12	2.34
6CQ8	1.86		

LT91 RECTIFIER

20 volt 2 amp.

Price $1.50, postage 10 Cents

PRINTED CIRCUIT TAB POTS

Values available: 500 ohm, 1K, 2K, 5K, 10K, 25K, 50K, 100K, 250K, 500K ohms, 1 and 2 megohms. Type "A"

Price 32 Cents each

RONETTE CARTRIDGES

Stereo type **$7.50** postage 20 Cents
Mono type **$4.50** postage 20 Cents

NEW MR3P AMP. METERS

Complete with shunt block. Face size: 3¼ x 3 inch, m/hole 2¾ inch. Ranges in stock: 150, 125, 100, 75 and 60 amps.

Price $7.00, postage free.

CASSETTE TAPES

B.A.S.F. C60	$1.45
B.A.S.F. C90	$2.85
B.A.S.F. C120	$3.70
Goldring C60	$0.99
Goldring C90	$1.50

Postage 20 Cents

BATTERY CHARGER FOR NICKEL CADMIUM

240 volts AC to 10 volts DC
22 mA. maximum

Price $10.00

Postage 40 Cents

MULTIMETERS

MODEL C-1000 POCKET MULTIMETER

1000 ohms per volt. AC volts: 0-10, 50, 250, 1000. DC volts: 0-10, 50, 250, 1000. DC current: 0-100 mA. Resistance: 0-150K ohms (3K centre). Two colour scale. Range selector switch. Dimensions 3½ x 2¼ x 1 inch.

Price $6.75, postage 30c

MODEL 200H MULTIMETER

20,000 ohms per volt. DC volts: 0-5, 25, 50, 250, 500, 2500 (20,000 o.p.v.). AC volts: 0-15, 50, 100, 500, 1000 (10,000 o.p.v.). DC current: 50 uA., 2.5 mA., 250 mA. Resistance: 0-60K/6M ohm (scale centre 300, 30K ohm). Capacitance: 10 pF. to 0.001 uF./0.001 uF. to 0.1 uF. DB. scale: —20 dB. to plus 22 dB. Size: 4½ x 3¼ x 1⅛ inch.

Price $11.95, postage 30c

NEW MODEL US-100

Overload protection. Shockproof movement. Polarity switch. DC volts: 0-0.25, 1, 25, 10, 50, 250, 1000 (20K o.p.v.). AC volts: 0-2.5, 10, 50, 250, 1000 (5K o.p.v.). DC current: 1 mA., 25 mA., 500 mA. and 10 amp. AC current: 10 amp. Resistance: 0-50 Megohm (centre scale 50), R x 1, 10, 100, 1K, 10K. DB. scale: —20 to plus 10, plus 22, plus 35, plus 50 dB.

Price $34.50, postage 40c

NEW TELEGRAPH MORSE KEYS

Beginner's type $1.50 postage free

LOG BOOKS

Price 75 Cents, postage 20 Cents

HAM RADIO SUPPLIERS

323 ELIZABETH STREET, MELBOURNE, VIC., 3000

Phones: 67-7329, 67-4286 All Mail to be addressed to above address

Our Disposals Store at 104 HIGHETT ST., RICHMOND (Phone 42-8136) is open Mondays to Fridays, 10.30 a.m. to 5.0 p.m., and on Saturdays to midday.

We sell and recommend Leader Test Equipment, Pioneer Stereo Equipment and Speakers, Hitachi Radio Valves and Transistor Radios, Kew Brand Meters, A. & R. Transformers and Transistor Power Supplies, Ducon Condensers, Welwyn Resistors, etc.

amateur radio

JOURNAL OF THE WIRELESS INSTITUTE OF AUSTRALIA. FOUNDED 1910

AUGUST, 1972
Vol. 40, No. 8

Published monthly, as the official journal, by the Wireless Institute of Australia. Reg. Office: Above 474 Toorak Rd., Toorak, Vic., 3142.

Editor:
Bill Roper VK3ARZ

Publications Committee:
John Adcock VK3ACA
Bruce Bathols VK3ASE
Syd Clark VK3ASC
Bob Dorin VK3ZU
Ron Fisher VK3OM
Ken Gillespie VK3GK
Philip Johnstone VK3YAZ
Neil Osborne VK3YEI
Bill Rice VK3ABP
Peter Wolfenden VK3ZPA

Contributing Editors:
Rodney Champness VK3UG
Don Grantley
Eric Jamieson VK5LP
Geoff Wilson VK3AMK

Drafting Assistants:
Andrew Davis VK1DA
Paul Niehoff VK3YFJ
Gordon Row L30187

Business Manager:
Peter B. Dodd VK3CIF

Publishing Associates:
Les Gough VK3ZH
Ron Higginbotham VK3RN

Enquiries and material to:
The Editor, Phone (03) 24-8652.
P.O. Box 150, Toorak, Vic., 3142.

Copy is required by the **third of each month.** Acknowledgment may not be made unless specially requested. All important items should be sent by certified mail.

The Editor reserves the right to edit all material, including Letters to the Editor and Hamads, and reserves the right to refuse acceptance of any material, without specifying any reason.

Advertising:
Advertisement material should be sent direct to the Editor by the **25th of the month preceding the month prior to publication.**

Hamads should be addressed to the Editor by the **third of each month.**

Printers:
"RICHMOND CHRONICLE"
Shakespeare Street, Richmond, Vic., 3121
Phone 42-2419.

CONTENTS

Page

TECHNICAL—

Modifying the TCA 1649 Low Band FM Transceiver to Two Metres 3
The "Wipertator" 7
Direct Keying of SSB Transmitters with Low Voltage Transistors 9
"Every Amateur Station should have one" 10
Electrical Measuring Instruments—Lecture 15C 11
Commercial Kinks: The Yaesu FT200 14
Newcomer's Notebook: Cheap Parts for Construction Projects 16

DEPARTMENTS—

Divisional Notes 22
Ionospheric Predictions, August 1972 21
Key Section 24
Letters to the Editor 22
Overseas Mag. Abstracts 22
QSP: August—A Jubilee Event 2
VHF UHF: an expanding world 23
You and DX 21
"20 Years Ago" 23

GENERAL—

Around the Trade 22
FM at Bedside 17
Licensed Amateurs in VK 18
New Call Signs 18
Reciprocal Licensing 17
Regulations and Licensing 16
Silent Key 24
SSTV Specifications 22
Two Metre Frequency Allocations 15

CONTESTS AND AWARDS—

Awards Column 20
Contests 19
VK-ZL-Oceania DX Contest, 1972 Rules 19

COVER

August is the month of the Remembrance Day Contest. The Shrine of Remembrance, Melbourne, reminds us of those Amateurs in honour of whose memory the contest is held.

(Photo by VK3YAZ and VK3ZU)

QSP

August—
A Jubilee Event

August is traditionally Remembrance Day Contest month. And so this month the Silver Jubilee R.D. Contest will be held in continuance of that tradition.

It is interesting to review the list of winning Divisions over the past twenty-four years. New South Wales has won once as has Victoria. Queensland has won three times, South Australia four and Tasmania seven times, whilst Western Australia tops the list with a total of eight wins. More details will be found elsewhere in this issue of "Amateur Radio".

Apparently the organisation of the necessary logistics for a win is beyond the two larger Divisions, New South Wales and Victoria. A pity, because a serious attempt by one or the other of these Divisions to win, would no doubt add interest to the Contest—and more QRM to the bands. As it is, they usually vie with each other for last place on the list. What can be done to encourage the "big fellas" to "have a go"?

A number of attempts have been made over the years to alter the rules, allegedly to make the Contest more equitable. Contestants are repeatedly asked to offer suggestions when sending logs but the number of viable ideas received has been small. Contestants should not be discouraged if their suggestions are not adopted straight away. Sometimes the idea may need "selling"—certainly it needs to be practical—and it should conform with the aims of the Contest.

"Selling" an idea can mean outlining all the advantages to the Federal Contest Manager, and then to one's own Division with a view to having the Division adopt the suggestion and add its weight of opinion to submissions to the Manager. Remember though the suggestions must be practicable—some years ago the rules required that only logs from members would be accepted for scoring purposes. This meant that all contestants had to send their logs to their Divisional office for accreditation. Logs were then sent on to the Contest Manager. This system proved cumbersome and slow in operation, loaded overworked Divisional Officers with extra work and caused frustrating delays to the Manager. The idea was not viable. The Contest Manager is usually the best judge of the practicality or otherwise of a suggestion and in recent years the Federal Council has very largely relied on his advice.

The aim of the Remembrance Day Contest is summed up as follows:—

> "A perpetual trophy is awarded annually for competition between Divisions of the W.I.A. It is inscribed with the names of those who made the supreme sacrifice and so perpetuates their memory throughout Amateur Radio in Australia.
>
> "The name of the winning Division each year is also inscribed on the trophy."

Thus basically the Contest is one between Divisions, individual operators do not win—a team effort—a Divisional effort is what is required. Suggestions therefore should be along the lines that will aid these aims.

With these thoughts in mind, then, what are YOUR suggestions for improving the twenty-sixth R.D. Contest?

D. H. RANKIN, VK3QV,
Federal Vice-President, W.I.A.

FEDERAL OFFICE

Arising out of consultations, the W.I.A. Federal office has moved to 474 Toorak Road, Toorak, Victoria, 3142. The offices are located above the shop at that address and entry to the offices is from Lamin Lane, parallel to Toorak Road (entry from Ross St.—one-way street), at the back of the shops. The telephone connection has now been made and is (03) 24-8652.

PHILATELISTS' NOTE

A circular from GW3VBP, Secretary of the Barry College of Further Education Radio Society, Colcot Road, Barry, Glam., advises that the British Post Office will issue, on 13th September, a set of four commemorative stamps. Three will commemorate the 50th anniversary of broadcasting by the B.B.C., and the fourth, at 7½ p., commemorates the 75th anniversary of the first wireless transmissions across water, by Marconi and Kemp from Lavernock Point near Barry to Flatholm Island and thence to Brean Down in Somerset. The B.C.F.E.R.S. will issue a special envelope for first day posting on the Island and this will include a post mark containing an Amateur Radio call sign—believed to be a first ever combination of this kind. If anybody is interested in receiving one of these rarities, please write direct (with 20 p.—not IRC's) or write to Magpubs, Box 150, Toorak, Vic., 3142; with a 75 cent postal order or cheque.

1973 CALL BOOK

If you have changed your address, call sign or the like please complete and send in the tear-out amendment sheet from the back of an old Call Book.

JAMBOREE-ON-THE-AIR

The Scouts 15th Jamboree-on-the-Air approaches quickly. The dates are 21st and 22nd October. Are you prepared? This year a special Pacific Islands theme is suggested: Contact as many as possible of the Groups in Micronesia, Melanesia and Polynesia. For those interested in Scout nets there is the world net every Saturday on 21.360 MHz. at 1800 hours Z and the Australian net on 14.120 MHz. at 2300 hours Z on the fourth Sunday of each month.

PROJECT AUSTRALIS

The A-O-C beacon on 435.10 MHz., which was built in Australia, has been sent to Amsat. A-O-C is still due for launch in November.

POST CODE POPULATIONS

Which is the most populated Post Code area? The current EDP membership listing shows this is shared by 3149 (Mt. Waverley) and 7250 (Launceston) with 37 in each, closely followed by 3150 (Glen Waverley) with 34. In the twenties are 2076 (Wahroonga) and 4700 (Rockhampton) each with 24, 3125 (Burwood) and 3128 (Box Hill) with 23. Sharing 22 each are 3046 (Glenroy) and 4810 (Townsville). With 21 is 6062 (Morley) and with 20 each are 3350 (Ballarat) and 4350 (Toowoomba). The most populous S.A. area is 5041 (Daw Park) with 17 which is shared with 5082 (Prospect). Others with more than 15 were 3500, 4305, 7018 (all 18), 2500, 3104, 3199, 4670, 7008 (17), 3131, 3193, 3550 (16). The population of VK1 is 61, VK8 mustered 38 and T.P.N.G. totalled 42.

COMMENT

The only thing that operates well outside the band is a cigar. (A.R.N.S.)

THOSE LETTERED BANDS

Know what they mean? "S" covers 1.5 to 4 GHz. which includes our 2.3-2.45 (low S) and 3.3-3.5 (high S) GHz. bands; "C" covers 4.0-6.0 GHz. (includes our 5.65-5.85 GHz. band); "X" runs from 6-12 GHz. (includes our 10-10.5 GHz. band); and "L" covers 400-1500 MHz. (1.5 GHz.). "P" is from 200-400 MHz., whilst "K" (12-36), "Q" (36-46), "V" (46-56) and "W" (56-100) apply to the higher GHz regions.

TIME ZONES

Do you know your time zone? Z, meaning GMT (Greenwich Mean Time—0 degrees longitude), is well understood. 105 deg. to 120 deg. East is time zone H and covers the western part of Australia, 120 deg. to 135 deg. East—Zone I—includes the central area, and 135 deg. to 150 deg. East, Zone K covers the East. New Zealand is in Zone M from 165 deg. to 180 deg. East longitude.

V.H.F. ADVISORY COMMITTEE

A motion was passed at the 1972 Federal Convention that the Executive appoint a V.h.f. Advisory Committee to make recommendations on v.h.f. and u.h.f. band planning and to administer v.h.f. activities previously conducted by the Federal V.h.f. Officer. A motion arising that this Committee be provided for the next three years by the Victorian Division was also adopted. The Committee, which has now been appointed and has been accepted by the Executive, consists of John Spicer, VK3ZEL, as Chairman; Ian Cowan, VK3ZDW, as Chairman for the time being of the VK3 V.h.f. Group; Bob Halligan, VK3AOT; Peter Wolfenden, VK3ZPA, and Bill Rice, VK3ABP.

Modifying the TCA 1649 Low Band FM Transceiver to Two Metres

RODNEY CHAMPNESS,* VK3UG

● The TCA 1649 is a six-valve transmitter and 13-valve receiver used on the 70 to 85 MHz. band. Very few of these are still in use, but many are thought to be still available from various second-hand sources. They are quoted as being capable of 7 watts output and if the 6V4 in the power supply (Fig. 6) is replaced with a couple of 800 to 1,000 volt silicon power diodes the output power can reach about 10 watts.

The modifications to the receiver about to be described were quite successful, but the results on the transmitter were singularly disappointing. The lack of success with the transmitter is felt to be due to the general layout of the transmitter, where in fact the low level audio is quite close to the output stage. Probably the change to high band accentuated the problem of audio input and r.f. output proximity. One Amateur at least who has modified one of these units has had complete success with the transmitter. The transmitter modifications are included for those who wish to try them.

The receiver suitably modified seems to be quite a reasonable performer although not up to the standards of a FET or nuvistor front-ended set, but not far behind. The unit was converted from semi-remote operation to fully local control. This transceiver makes a compact cheap monitor set, when multi-channelled.

These sets when first picked up seem to be full of faulty ½ watt resistors, so as the first suggestion check every resistor in the set to make sure it is of the right value. One or two of the ceramic capacitors were also faulty. The valves in general seemed to be reasonable.

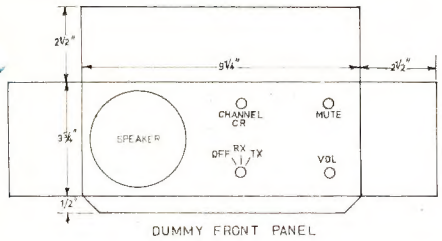

DUMMY FRONT PANEL

Fig. 1.

TRANSMITTER MODIFICATIONS TO 146 MHz.

The following modifications were supplied to me by Tony VK5ZAI/T and were used as the basis of the modifications (see Fig. 4): T1 = 602 replaced with T2 = 603. T2 = 603 is replaced with T3 = 604. These are marked on the sides of the cans.

Original T1 = 602 is rewound with 20 turns on each winding with 1/16" between windings. Plate winding 26 B. & S. with 5.6 pF. across it, and the grid winding 26 B. & S. has 2.2 pF. across it.

L1 = 605, remove 3 turns until 5½ turns remain, no capacitor across this coil. L2 is cut back to 3 turns ⅝" long, L3 is cut back to 4 turns ¾" long. Couple L2 and L3 approximately ¾" centre to centre.

R27 changed from 180K ohms to 39K ohms, and R37 changed from 18K ohms to 15K ohms.

L4, p.a. tank coil, is reduced from 8 turns to 4 turns, spaced to cover original length.

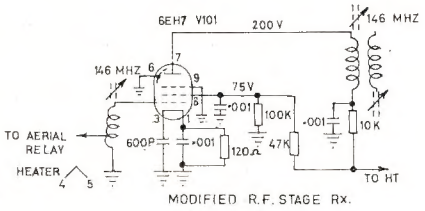

MODIFIED R.F. STAGE RX.

Fig. 2.

RECEIVER MODIFICATIONS

The receiver alterations (Fig. 5) supplied were as follows: T101 rewind with 3¾ turns 18 B. & S., tapped at about one turn up from earth for the aerial input. T102 plate 3½ turns 18 B. & S. spaced 5/16", the grid winding 3 turns 18 B. & S. spaced ⅜" with windings 1/16" apart. No capacitors are across these coils and they will be slug tuned. The oscillator coils are unchanged, and multiply by two in each stage, giving about 59 MHz. and 118 MHz. as the output from each multiplier stage. L101 can have 1 turn removed for easier tuning.

In actual fact, with everything going your way, this is all the modification that is strictly necessary other than the actual alignment.

It was felt possible to improve the performance and at the same time reduce the current drain of the set. Valves V110 (6AL5 discriminator) and V111 (6AU6 first audio) were removed completely. The heater chain remains balanced if both of these are removed. V113 (6N8 noise amp. and mute) was replaced with a 12AX7, being used as an audio amp. and also as the mute amplifier. The discriminator was replaced with two 0A81 germanium diodes as were the mute diodes.

With this alteration to the circuit several parts are eliminated, the circuitary in general is more straight forward and there is less current drain. The actual modifications can be seen by comparing the original and modified circuit diagrams of the receiver.

The 6AK5 in the front end was replaced with one of the latest frame grid valves, a 6EH7. This involves changing the valve socket from a 7-pin to a 9-pin. This was wired as shown in Fig. 2. I felt that T101 and T102, with their rather long leads, were far from suitable for use at 2 metres. Both of these metal cans were removed, the whole of the assembly was removed and the coil former sawn off about ⅜" above the chassis.

Three small Neosid formers were then glued to the bits left of the old coils. One was glued to T101 and two were glued side by side on opposite sides of the ridge in the centre of the base of the other old coil former. From memory the two grid coils were wound with 3 turns of 24 gauge wire and the plate winding had 5 turns. There is no capacitor across any one of these coils. The v.h.f. ferrite slugs will tune these coils nicely with little loss.

When the 6AK5 is replaced with the 6EH7, the balancing resistor on the heater line should be changed to about 100 ohms. The heater wiring for the 12AX7 must also be altered such that pins 4 and 5 are commoned to 6 volts and pin 9 is earthed.

The speaker circuit should be modified as follows (see Fig. 5): The left hand connection of the speaker should be disconnected from the top of T110 and connected to the bottom end of T110, i.e. to the earth end.

As mentioned previously, this unit was made into local control only as it suited my needs that way. The front panel was removed and the speaker and grills removed. A false front panel as shown in Fig. 1 was constructed. The speaker was then mounted over to one side of the false front so that the controls could be mounted on the other side. The four controls were mounted into a square formation. The controls were positioned such that the added control of channel change could be fitted in the least awkward position.

There is just sufficient room above the transmitter audio valves to mount

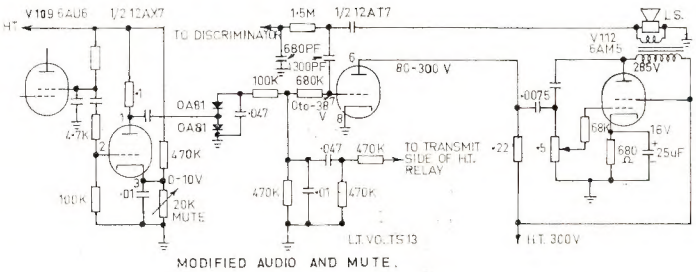

MODIFIED AUDIO AND MUTE.

Fig. 3.

* 24 O'Dowds Road, Warragul, Vic., 3820.

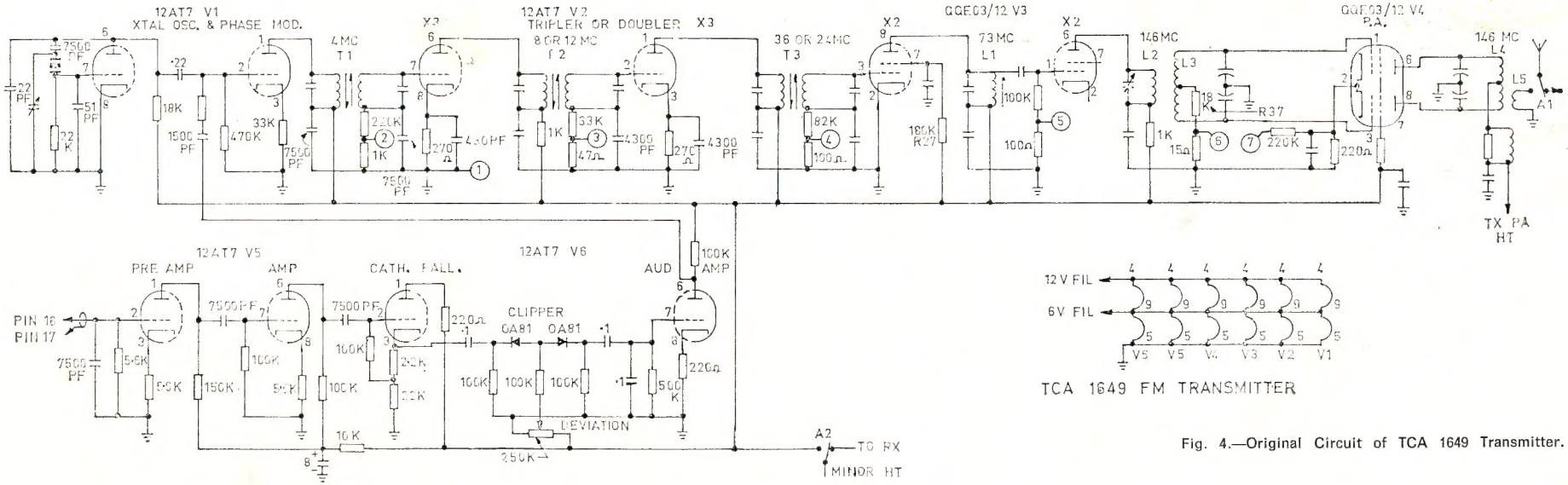

Fig. 4.—Original Circuit of TCA 1649 Transmitter.

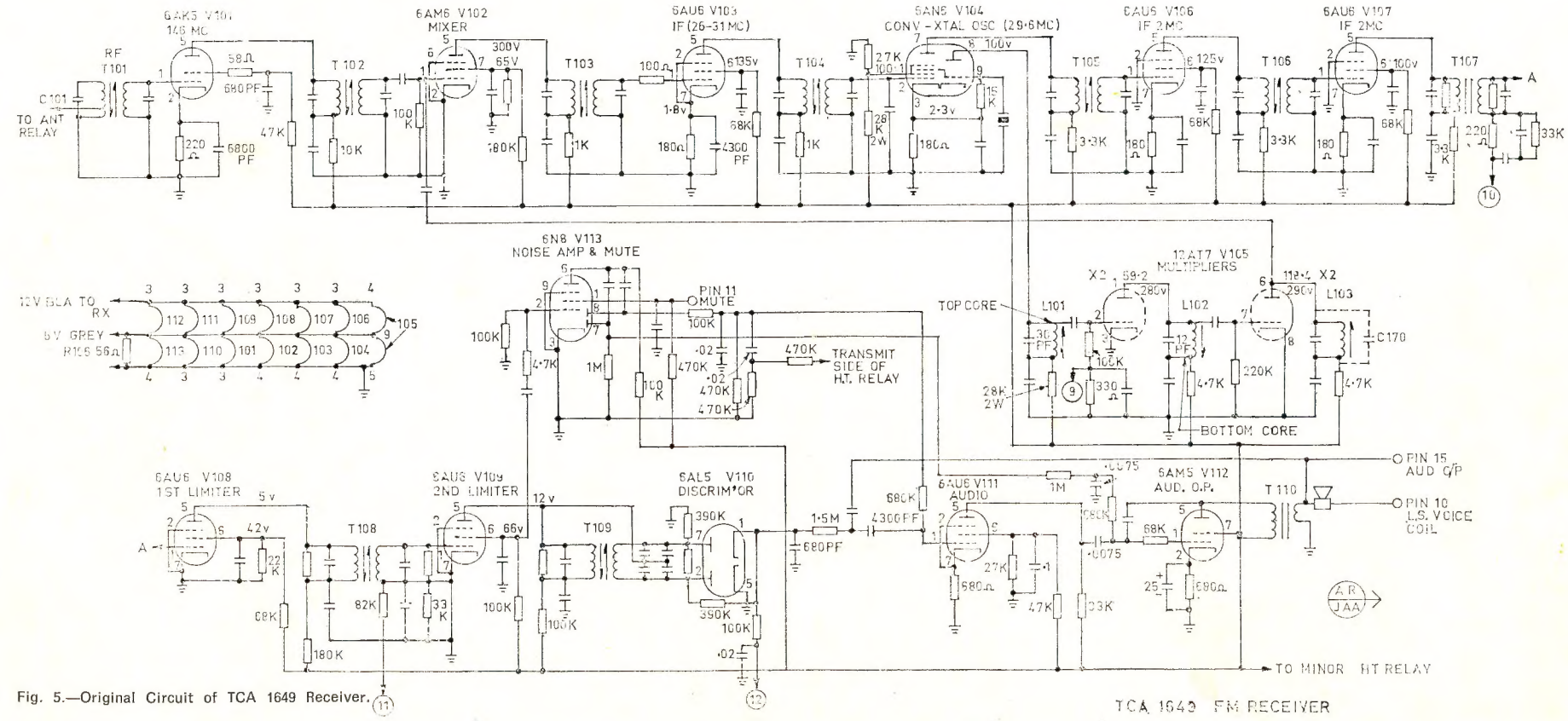

Fig. 5.—Original Circuit of TCA 1649 Receiver.

a 3-channel transmit and receive bank of crystals. The crystals are mounted such that they only clear the top of the set mounting case by about ½". If it is decided that only the receiver will be used, it would be possible to have facilities for switching more channels. The receiver switching is simple, only involving extension of the wire from pin 9 of the 6AN7 to a switch which appropriately switches the crystals. No trimmers for frequency correction are used on the original circuit and it was found unnecessary too, due undoubtedly to the wide band i.f. channel.

RECEIVER ALIGNMENT

Now to the alignment of the receiver. The i.f. train is aligned to 2 MHz. exactly. It is unnecessary to dampen the windings. Monitor pin 10 of the monitor socket and adjust all i.f. cores for a maximum reading on the limiter meter. To adjust T108 shift metering to pin 11 and, keeping the input fairly low so that the first limiter is not limiting too heavily, adjust the primary and secondary for a maximum. To adjust T109 meter pin 12: Adjust the secondary, which is usually the top winding, for some reading on the meter then adjust the primary, which is the bottom winding, for a maximum reading. Once this peak is obtained, adjust the other winding for zero reading. You should get a reading either side of zero as the slug is wound in and out of the core. The 2 MHz. i.f. strip is now aligned. It would pay, however, to go over these cores again to make sure all are peaked right on the nose.

The oscillator can now be tuned. Tuned circuits L101 and L102 are included in the one can. First adjust L101, which is tuned with the top core for 60% of maximum output as measured at pin 9 of the meter socket. If adjusted to give more output than the 60% recommended, it will be found that the oscillator is unreliable in starting. At this stage it is most desirable to have a signal source of quite high strength to line up the front end and the rest of the oscillator train.

Inject a strong signal at the front end of the set, preferably have another carphone running on a dummy on the bench alongside. Meter again on pin 10 of the meter socket and adjust all the front-end cores for a maximum on the meter, including the oscillator cores. With luck the set will now be fairly well tuned up.

It would be desirable to put the set onto an aerial now and either listen for a signal or have a signal generator pump a detectable level of signal into the set so that it can be peaked further. The level from the generator is reduced as the set comes into alignment.

This is, of course, an easy way out if you have access to another carphone. Without another unit, put a signal on 27.6 MHz. into the grid of V103 and adjust T104 for maximum limiter current. Now put the signal generator output into the grid of the first mixer V102 and adjust T103, and re-adjust T104. This is the high i.f. aligned using Channel B as the alignment channel. On the frequency of Channel B (146 MHz.), inject a signal at the same point as above and adjust L102 and L103 for maximum limiter reading. If the generator is now connected to the aerial terminal, T101 and T102 can be adjusted and L103 re-adjusted for maximum limiter current.

The set will now be fairly well aligned. Once again, however, it would be advisable to go over all slugs except L101 whilst listening to a fairly weak signal. The set should now give quite credible performance, in regards sensitivity, mute characteristics, audio volume and clarity.

Fig. 3 shows the modified discriminator, mute and audio circuitry.

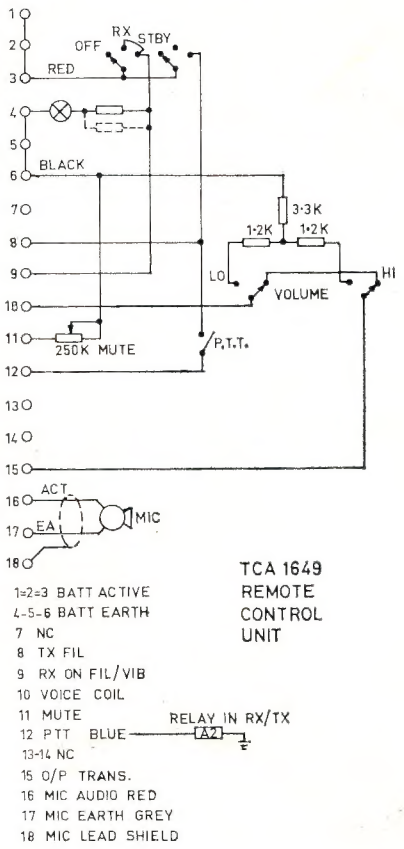

Fig. 7.

Note Errata: The volume control resistors are in ohms, not K ohms. They should be 1.2 ohms, 3.3 ohms and 1.2 ohms.

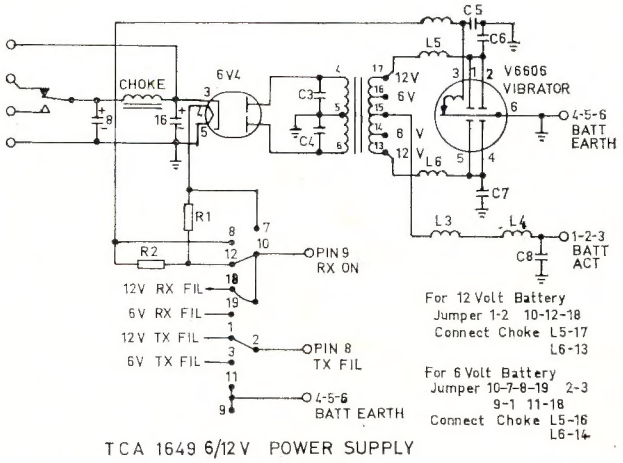

TCA 1649 6/12 V POWER SUPPLY

Fig. 6.

CRYSTAL FREQUENCIES

The crystal frequencies required are as follows:

Receiver—

Channel	A	29570.8	kHz.
,,	B	29600	,,
,,	C	29629.2	,,
,,	1	29520	,,
,,	4	29580	,,

Transmitter—

Channel	A	4051.55	kHz.
,,	B	4055.5	,,
,,	C	4059.61	,,
,,	1	4058.33	,,
,,	4	4066.66	,,

The transmitter crystals are the same as used in A.W.A. carphones, Vintens, I.G.L. transceivers, and many other varieties of f.m. transceivers.

The transmitter modifications as shown are for V2A to double to 8 MHz. from 4 MHz., V2B to triple to 24 MHz., V3A to triple to 73 MHz., and V3B to double to 146 MHz. This line was modified in the quest to get decent performance from the transmitter such that V2A triples from 4 to 12 MHz., V2B from 12 to 36, V3A to 73, and V3B to 146 MHz. The differences in the transmitter coils are unavailable as the modified set has been sold.

If it is desired to run the unit on a.c. it would be fairly simple to substitute an a.c. supply for the internal vibrator supply. In all, if you can get the transmitter functioning more successfully than I did, quite a compact multi-channel 10 watt a.c. or d.c. 2 metre transceiver results.

One final point, a small tinplate shield should be soldered across the 6EH7 valve socket such that the grid and plate circuits are shielded from one another. It may also be more convenient to mount the grid input coil below the chassis for the convenience of tapping the aerial lead on the aerial coil.

The remote control unit diagram is shown in Fig. 7. ●

AMATEUR FREQUENCIES:
ONLY THE STRONG GO ON — SO SHOULD A LOT MORE AMATEURS!

SIDEBAND ELECTRONICS ENGINEERING

YAESU MUSEN:

FT-DX-401 Transceivers, same as FT-DX-570, only	$580
FT-DX-560 Transceivers, new number for the FT-DX-400, only	$520
Noise Blanker Kit for the 560 and 400, only	$20
160 Metre Conversion Kits for the FT-101	$15
Both Kits with explicit instructions.	

MIDLAND PRODUCTS:—

One Watt Transceivers, three channels	$40
Crystals for 27.085, 27.24, 27.88, 28.1, 28.2, 28.3, 28.4 and 28.5 MHz. operation .... per pair	$3
12 Volt Re-chargeable Nickel-Cadmium Batteries	$10
AC Chargers/AC Eliminators for 12V. operation	$10
SWR-Power Meter, duo meter type	$20
SWR-Meter, single meter type, and FS Meter ..	$12
Dynamic PTT Microphones, hand-held	$10
Same, table-desk type, $15; with pre-amp.	$20
Light weight Headphones, 8 ohm	$6

MIDLAND PRODUCTS (continued):—

5 Watt Transceivers, 240V. AC or 12V. DC, for 8-channel, 27 - 28.5 MHz. operation, including PTT mike .... clearance	$80

HY-GAIN ANTENNAS:—

14-AVQ 10-40 Metre Vertical	$45
TH3JR Three-Band 3 Element Junior Beam	$110

MOSLEY ANTENNAS:—

Mustang MP-33 3-element 3-band 1 kw. traps	$120
TA33JR 3-band 3-element Junior Beam	$100

KATSUMI Electronic Keyers, type EK-26, AC powered, few only	$50
ANTENNA ROTATORS (both complete with 220V. AC control-indicator units):—	
CDR Ham-M	$135
CDR AR-22R	$45
CO-AX CONNECTORS, male, female, dble. female, ea.	75c
EIMAC 3-500-Z zero-bias linear amplifier tubes	$37.50
CETRON 572-B 150w. zero bias linear tubes, per pair	$45
CRYSTALS FT-241, per box of 80 crystals, 375-515 kHz.	$10
GALAXY V. VOX Units	$25

All prices net Springwood, N.S.W., cash with orders, **sales tax included** in all cases, transportation/postage/insurance extra, subject to alteration without prior notice.

SIDEBAND ELECTRONICS ENGINEERING **Proprietor: ARIE BLES**

P.O. BOX 23, SPRINGWOOD, N.S.W., 2777 **Phone Springwood (STD 047) 511-636**

The World's Most Versatile Circuit Building System!

SIZES: 1/8" and 1/16" WIDTHS

LENGTH: 100 ft. roll, 5 ft. card

IDEAL FOR PROTOTYPE AND PRODUCTION CONSTRUCTION

USEFUL FOR WIRING REPAIRS

★ NO DRILLING ★ FAST ★ NO MESS

Available from all Leading Radio Houses

Marketed by—

ZEPHYR PRODUCTS PTY. LTD.

70 BATESFORD RD., CHADSTONE, VIC., 3148

Telephone 56-7231

ZEPHYR

MANUFACTURERS OF RADIO AND ELECTRICAL EQUIPMENT AND COMPONENTS

THE "WIPERTATOR"

or how to rotate your VHF array with a windscreen wiper motor

PHILIP R. JOHNSTONE, VK3YAZ*

• Two windscreen wiper motors (ex any auto-wrecker) plus a fair amount of mechanical and electrical ingenuity have gone into the device described here. The result is a simple and economical unit, ideal for rotating an acceptable size of v.h.f. or u.h.f. array.

It should be stressed from the outset that this device is restricted to small v.h.f. and u.h.f. arrays, this being due primarily to the nylon gears used. Those disenchanted with the capabilities of nylon read no further! However, there is an inherent advantage of nylon gears in that they can withstand fairly high impulsive loads without shearing under shock as can happen with die-cast gear trains.

Although this rotator is capable of high torque, the design of the antenna arrays is important. It is desirable to keep the inertia to a minimum and hence the operating angular momentum low. This is achieved by using:

1. Yagis of short boom length with vertical stacking, particularly for 144 MHz.
2. Phased colinear arrays for 432 and 576 MHz.

Thus by concentrating the mass of the array at the point of rotation, the moment of inertia and the resulting starting torque will be minimised. A 52 MHz. antenna has not been tried, however on the performance to date it would seem feasible to use a three element yagi, perhaps in lieu of a 144 MHz. antenna.

The period of rotation of approximately one minute has proven to be a good compromise between speed and sensitivity.

The following notes are divided into three sections, viz. Mechanical, Electrical, and Calibration, enabling construction without recourse to extensive workshop facilities. It would seem prudent to read all sections fully before assembly is contemplated.

MECHANICAL DETAILS

The basis of the unit is two 12 volt Lucas windscreen wiper motors readily purchased from your neighbourly motor wreck for about $4 the pair. Those actually used were of Triumph Herald origin, although virtually all post-1950 English cars were fitted with almost identical units. The self-parking models may be found more useful, although they are not necessary for the direction indicating mechanism described herein.

It can be seen that there are two major components: the motor and gearbox from one unit, and the gearbox and armature shaft from the other. The first step is to dismantle and thoroughly clean each unit separately, ensuring that no components become interchanged, and select the armature with the better commutator and bearings to form the basis of the motor. The other armature has to be removed from its shaft, ideally done in a press but achieved simply by slipping a piece of ½" pipe over the shaft and carefully hammering without bending or scoring the shaft.

Next, remove the nylon gear in the motor unit from its shaft and driving flange. Hacksaw off the shaft flush with the flange, and then drill a 13/32" hole in the centre of the flange.

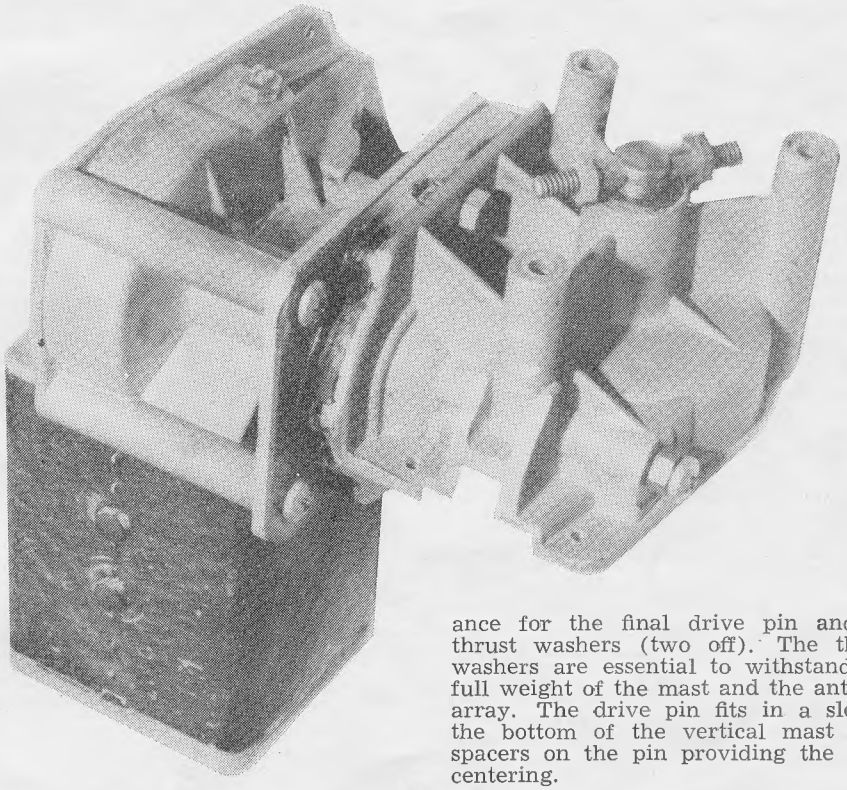

Cut out and drill the adaptor plate to the dimensions shown in Fig. 2, using either 8 gauge aluminium or ⅛" mild steel. Next cut 5/16" from the body of the second unit at the gearbox end. This, together with the adaptor plate, now enables the attachment of the second gearbox to the first. Having done this (still leaving the adaptor plate bolts loose), slide in the armature (secondary) shaft to check that the dimensions given in Fig. 3 will, after attaching the drive flange, give satisfactory bearing surface and end float. Naturally this will depend on the thickness of the adaptor plate chosen! The end-float adjusting screws should be retained on both gearboxes.

After cutting the secondary shaft to length, the drive flange is attached. The best method is to weld it, although collars and bolts could well be used if the secondary shaft is sufficiently projected through the flange. The circlip groove on the secondary shaft can be "turned" on later with judicious use of the hacksaw while the motor is running. The tertiary shaft can be drilled 3/16" for the final drive pin.

Approximately ⅛" is cut from the secondary gearbox casting through which the tertiary shaft passes to provide the final drive. This results in a reduction of length in the tertiary shaft bearing and permits sufficient clearance for the final drive pin and its thrust washers (two off). The thrust washers are essential to withstand the full weight of the mast and the antenna array. The drive pin fits in a slot at the bottom of the vertical mast with spacers on the pin providing the mast centering.

The indicator mechanism is a pair of **wire wound** potentiometers "araldited" together and connected as shown in Fig. 1 to become VR1. The indicator drive could be bolted instead of welded as shown. This arrangement allows 600° relative rotation between the two shafts. The housing of this "siamesed" resistor is fashioned from the original cover with an appropriate length of tube soldered inside between the ends of the sectioned cover. The tube length will depend on the dimensions of the potentiometers used.

After assembling the complete unit (with a liberal packing of grease) fit the final drive pin—a 3/16" metal-thread, and check that the secondary shaft alignment is satisfactory. The

* 65 Karnak Road, Ashburton, Vic., 3147.

adaptor plate bolts can be "nipped up" later with the unit running.

The siamesed indicator resistor can be installed, with its housing left free to rotate under the gear cover clamp plate. The control leads should make at least two turns around the potentiometers before exiting the housing.

ELECTRICAL DETAILS

The motor unit draws about 5 amp. at 14 volts d.c. from the filament windings of an old t.v. power transformer, and the indicating system requires about 30 mA. at 14 volts.

The simple method of motor direction control presented requires only a two-wire circuit. It can be seen from Fig. 4 that the bridge rectifier installed inside the motor unit allows current flow in one direction only and hence reversal of polarity of the motor supply results in shaft reversal. The four BY126/400 diodes fit neatly inside the end housing and are soldered directly to the terminals.

The circuit of Fig. 4 has been submitted purely and simply because it works, and no other claims are made! Its inherent limitation is that it is somewhat dependent on device parameters. Because a variable resistance and not a potentiometer is used at the rotator, then some form of non linear circuit is required to obtain linear meter operation. A simple ohmmeter type circuit is unsatisfactory. The original design was constrained by the 1 mA. 100 ohm meter movement and the 1,000 (2 x 500) ohm siamesed resistor.

The pinch-off voltage of the FET is critical and VR2 and VR3 are used to set the zero and f.s.d. points respectively. R1 provides feedback contributing to the non-linearity while R2 prevents the needle from slamming f.s.d. when the supply voltage is removed. It is mandatory that a regulated supply be used for the metering circuit. Transistors Q2 and Q3 in a Darlington configuration act as an emitter follower, with Q1 as a constant current source. Incidentally, the zener diode used was a reverse biased base-emitter junction of a silicon transistor from the junk box. It may be necessary to test a few to find one having the required breakdown voltage of 11 vlots, however the affluent purists may use a BZY88/11v. diode. The 0.01 uF. across the brushes may be needed to reduce commutator "hash".

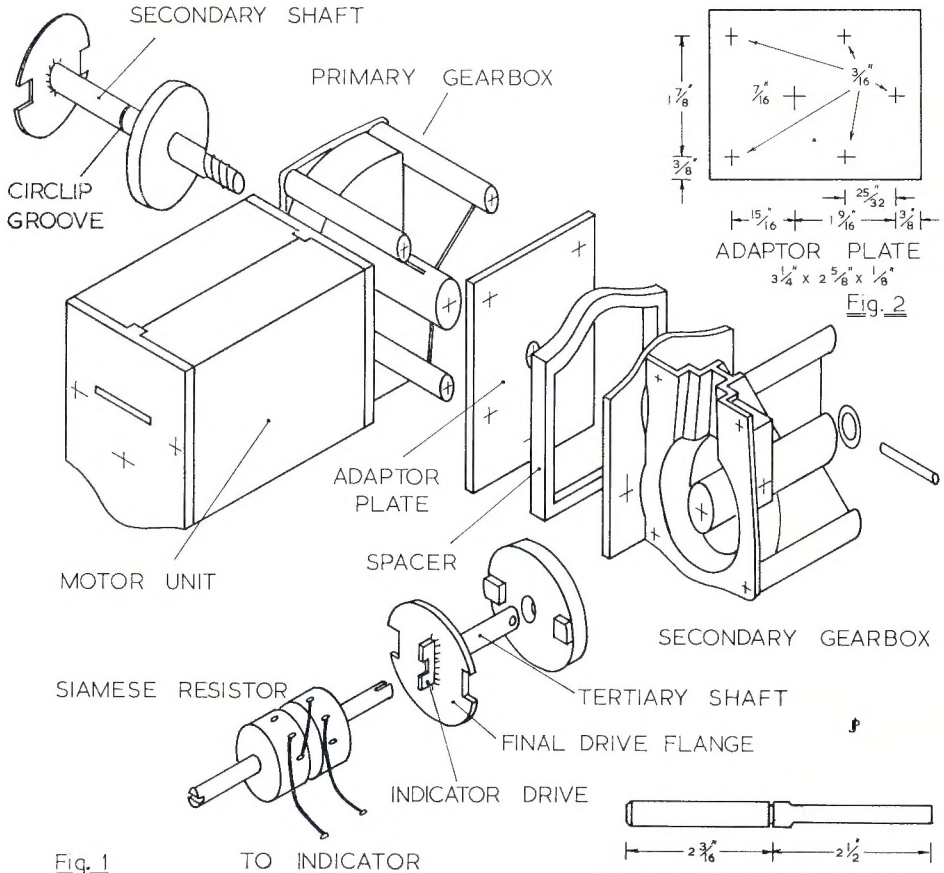

Fig. 1

Fig. 2

Fig. 3 SECONDARY SHAFT (approximate dimensions)

CALIBRATION

It is considered that the following method is the simplest and most accurate method of calibration. The first step is to set the unit up on the bench using the ultimate correct length cable with VR1 (the siamesed resistor) disconnected. Ensure that VR1 housing on the secondary gearbox is free to turn, operate the motor to what will be the in-situ North-South position. Now rotate VR1 housing until VR1 resistance measured with an ohmmeter is zero, the housing should be fully a.c.w. (viewed from below with the unit in its ultimate orientation), if this is not so then VR1 has been terminated incorrectly.

If the termination of VR1 is correct, connect it into circuit and rotate the housing 20° c.w.; mark this point on the body of the rotator, and adjust VR2 to give zero meter deflection. Now rotate the housing a further 400° c.w. and mark this point also and set f.s.d. with VR3; these two points are now the limits of rotation. Repeat the procedure and check the zero and f.s.d. points again as there may be some interaction. Check that the mid-scale meter deflection corresponds to the position midway between the two points originally marked. This shall be North. If this is not so, then some alteration to the feedback resistor R1 may be necessary. Having achieved the correct position for these three points, the remainder of the calibration is simple:

Meter zero = bearing of 160°
Mid-scale = 0°
f.s.d. = 200°.

This results in 40° overlap in the South (bearing 180) plus about 20° safety margin at each end of the rotation of VR1. The position of bearings 45 (NE), 90 (E), 135 (SE), etc., are determined by interpolation.

Having satisfied yourself with the accuracy of calibration, paint the unit liberally with aluminium roofing paint (bitumen based if possible) and water-

(Continued on Page 17.)

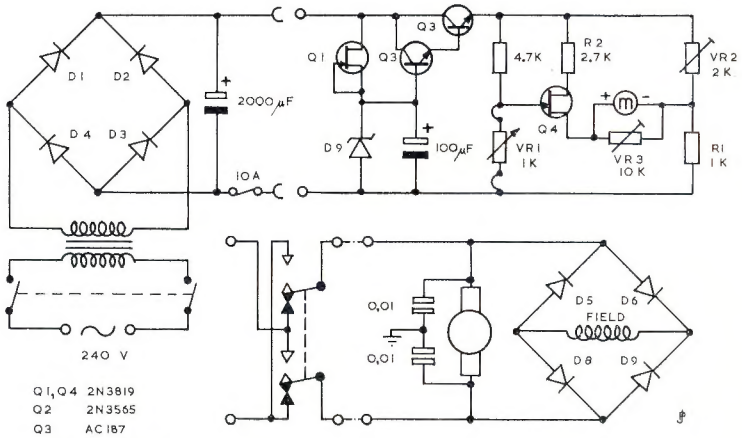

Fig. 4

DIRECT KEYING OF S.S.B. TRANSMITTERS WITH LOW VOLTAGE TRANSISTORS

L. H. VALE, VK5NO*

• A useful adjunct for the c.w. operator using commercial equipment. Thoughts on the elimination of key clicks are included.

The use of the output transistor in an electronic keyer for directly keying a transmitter offers the main advantage that elimination of the keying relay obviates distortion to the characters, caused by the operating time of the relay. In addition, when it is considered that a fast relay, if new, will cost about as much as the rest of the keyer components put together, and probably consume five or six times the power (if you have used modern components in the keyer), then it does seem unwise to use the output transistor in the keyer to operate a relay which keys the transmitter with some distortion when the output transistor can key the transmitter directly without the distortion.

Not all transmitters are capable of being keyed by a transistor—fortunately, however, almost all the normal s.s.b. transmitters and transceivers use blocked-grid keying and this makes them ideal for this application. In these applications the voltage between the key terminal and earth is about 100 to 150 volts negative when the key is open. The current when the key is closed is somewhat less than 10 mA., so that a PNP transistor can be connected with the collector to the key terminal and the emitter to earth.

A negative base current to the transistor of a fraction of one milliamp. will suffice to saturate the transistor and bring the transmitter on the air. This base current can be supplied comfortably by even low powered integrated circuits in a keyer. However, the catch is that the keying transistor must have a V_{CER} rating of 150 volts, and while transistors of this type are available, they are comparatively expensive and are not usually found in the junk box.

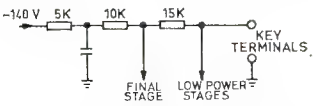

FIG 1 SIMPLIFIED KEYING CIRCUIT

The problem is how to reduce the open key voltage to a lower value. Generally speaking, 65 volt transistors cost about a dollar and 25 volt transistors about half that. If the voltage could be reduced to less than 25 volts almost any of the cheaper PNP transistors could be used.

Fig. 1 shows a simplified circuit of the keying circuit of the FL100B transmitter when switched to c.w. This is almost identical with other Yaesu circuits seen by the writer (except that of the FL-DX-400) and also most of the American valve transceivers. It will be seen that when the key is open the full 130 volts from the bias supply appears across the key and is applied to the grids of all the keyed valves in the transmitter, effectively cutting off all transmission and, in fact, all anode current, in the keyed stages.

The low power stages in the transmitter, however, do not require 130 volts to cut them off, or anything like that voltage. It is possible to connect a resistor across the key terminals and reduce the key-open voltage to quite a low voltage (about 10-15 volts in the case of the FL100B) before the transmitter starts to transmit.

The procedure then is to connect a variable resistor (say a 50K potentiometer) across the key terminals, turn the transmitter on, and reduce the resistance until transmission starts. Measure the voltage across the resistor and determine if it is within the capabilities of your proposed keying transistor. If it is, measure the resistance of the variable resistor across the key terminals and connect a fixed resistance of slightly higher value in its place across the key terminals. Re-check the key voltage with the resistor in place to make sure the voltage is still within the ratings of the transistor, then connect the keying transistor as shown in Fig. 2.

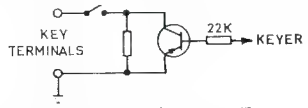

FIG 2 KEYING TRANSISTOR CIRCUIT

It is necessary to include the switch so that the keying circuit can be cut out while using s.s.b. If the resistor is left in circuit during s.s.b. transmission, it may disable the a.l.c. circuit, as it does in the FL100B. This extra switch can be obviated by the use of a blocking diode in the transmitter or by a re-arrangement of the internal switching. The writer understands, however, that internal modifications to commercial equipment are considered taboo.

An alternative method of choosing the correct value of resistance across the key terminals is to increase the variable resistance from zero until the voltage is just within the ratings of the transistor, then check that there is no back wave with the key up.

During the above procedures, the criterion with the key up is that the transmitter is not actually transmitting —not that the final stage anode current is cut completely off. To determine that there is a complete lack of back wave it is necessary to listen on a separate receiver. If you are using a transceiver it may be necessary to enlist the aid of a near neighbour.

If there is standing current in the final stage with the key up, this could well be a good thing for your neighbours because it does help to reduce key clicks. Whatever the resistor value used across the key terminals, the key-up dissipation in the transmitter on c.w. will be less than for the non-voice quiescent condition on s.s.b., which we accept.

Mention was made earlier of the FL-DX-400. In this transmitter there is a resistance already across the key and the key-open voltage is well below 25 volts.

In the writer's case, a 3.9K resistor across the key terminals of the FL100B reduces the open-key voltage to about 15 volts and an inexpensive 2N3638 keying transistor is used. For a time the 2N3638 was needed for another job and was replaced with a germanium 2N404, with no difference in performance. As between different transmitters and transceivers the required value of the added resistor may vary over a wide range and should be found experimentally. In some cases (for example in the FT-DX-400) it may be necessary to find a value that allows an internal monitor to operate satisfactorily and this may require the use of a transistor with slightly higher voltage rating.

Another advantage of direct transistor keying is the attainment of simple and effective key click suppression. The FL100B and, I believe, some other s.s.b. transmitters are somewhat deficient in the suppression of clicks when keyed with the normal pair of contacts of a key, relay, etc. By connecting a capacitor of correct value between collector and base of the keying transistor, the clicks at both make and break of the key can be completely eliminated.

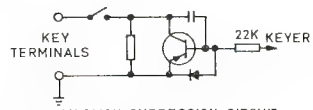

FIG 3 KEY-CLICK SUPRESSION CIRCUIT

If you are determined to remain faithful to your old pump handle or key, the circuit in Fig. 3 is strongly recommended as a compact and very effective click filter, connecting the key contacts between the open end of the base resistor and about 5 volts negative. The correct value of the capacitor will depend upon many factors and must be determined by experiment. A good value to commence trying is 0.0033 μF. It will be quite easy to make the keying too soft with a capacitor too large in value.

The suppression is equal on both make and break, and this is a little difficult to achieve with circuits used with contact keying. Do not omit the diode between base and emitter or an inadvertent short across the key terminals will probably ruin the keying transistor by transferring a positive spike to the transistor base.

(Continued on Page 15.)

* 29 Calton Road, Gawler, S.A., 5118.

"EVERY AMATEUR STATION SHOULD HAVE ONE"

LINDSAY DOUGLAS, VK2ON*

● For a multi-band antenna which works on seven bands and has about 13 dB. gain on 146 MHz. in two directions, the rhombic takes a lot of beating. The materials cost about $10 for a pair of them.

The location of Gosford is about mid-way between Sydney and Newcastle so that a bi-directional beam is quite effective for v.h.f. Actually two similar rhombics, whose axes are almost identical, are used. One is horizontally polarised and the other (situated two feet higher) is vertically polarised. No interaction between the two has been observed.

Each rhombic uses 100 feet of 18 gauge s.w.g. hard-drawn copper wire and about 30 feet of 300 ohm ribbon for the lead-in. In the shack a two feet section of the bare copper 18 gauge, spaced ½" with four spacers, enables matching to a six feet piece of 50 ohm co-ax. The latter plugs into the equipment via an s.w.r. meter. On 146 MHz. the position of the co-ax. leads and Philips trimmer are varied a half to one inch at a time and the variable condenser tuned, for best s.w.r. A ratio of 1:1 is easily obtained. The rhombics are unterminated.

On the h.f. bands these rhombics give a useful performance although no directional effects can be expected. The matching section, of course, does not function at h.f. frequencies. An antennascope (r.f. bridge) was used to plot the resonances on or near the various bands. The rhombics can be used as emergency antennas when the main h.f. antenna is out of service.

* 5 Mason's Parade, Gosford, N.S.W., 2250.

RESONANCE OF 146 MHz. RHOMBICS ON H.F. BANDS

Band MHz.	Antenna Polarisation	Impedance Ohms	Resonance MHz.
3.5	Vertical	45	3.7
3.5	Horizontal	45	3.8
7	V	45	7.1
7	H	45	7.4
14	V	50	14.0
14	H	50	14.1
21	V	45	18.5
21	H	45	19
28	V	45	30.5
28	H	45	31.5
52	V	45	52.5
52	H	45	52.5

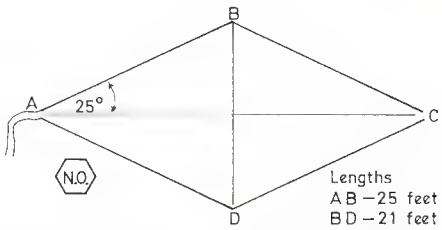

PLAN OF 3.6λ PER SIDE RHOMBIC

The rhombic described is only 18-20 feet high which appears satisfactory on 146 MHz. For those who like to vary the dimensions, I include an extract from Jasik's excellent book on antennas:—

Rhombics

Power gain (dB.)	10.5	13	14	15	15.5	18
Length of side (wavelength)	2	3	4	5	6	11
Half Angle of vertex	40°	30°	25°	22°	20°	15°

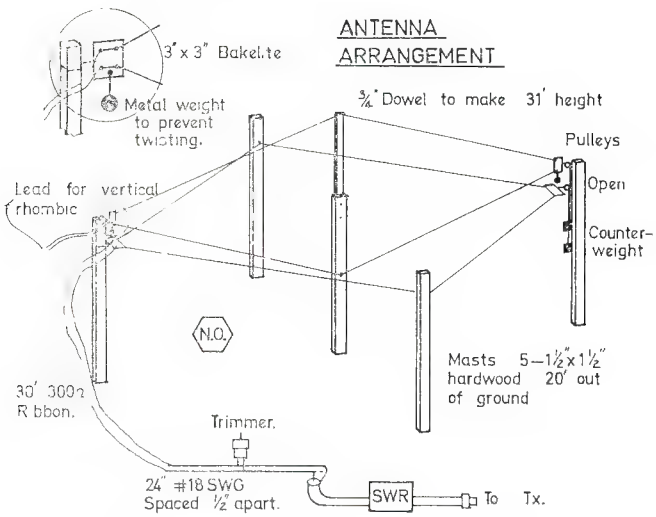

KITS

★ **VK3 2 & 6 MX PRE-AMPS.**
as in Dec. '70 "A.R."
$4.86 complete

★ **VK3 2 METRE CONVERTER**
as in Feb. '69 "A.R."
$10.58 complete

★ **VK3 432 MHz. CONVERTER**
DOUBLE CONVERSION:
$18.30 complete
SINGLE CONVERSION:
$14.52 complete

★ **VK3 6 METRE CONVERTER**
as in Dec. '71 "A.R."
$15.50 complete

★ **CARPHONE BOARDS**
TRANSMITTER **$5.00**
RECEIVER **$5.00**
Components list supplied.

Available to W.I.A. members only

BUILT BY AMATEURS FOR AMATEURS

Write for the list of keenly priced components, post free

Send Money Order/Cheque to:

W.I.A. VICTORIAN DIVISION COMPONENTS COMMITTEE
P.O. Box 65, Mt. Waverley, Vic., 3149

Send 20c (Vic.), 30c (other States) for postage

ELECTRICAL MEASURING INSTRUMENTS

LECTURE 15C

C. A. CULLINAN, VK3AXU*

• Continuing the series of lectures by C. A. Cullinan, VK3AXU, at Broadcast Station 3CS for students studying for a P.M.G. Radio Operator's Certificate.

MEASUREMENT OF POWER FACTOR

The phase displacement between the voltage and current in an a.c. circuit is dependent on reactances which may appear in the circuit.

If the circuit (load) is a pure resistance it does not contain reactance and there will not be any phase displacement between the voltage and the current, and the power factor of the load is unity (1.0).

However, it is common to find that the load consists of resistance with inductance or capacitance; sometimes there may be a mixture of all three. Now the presence of an inductance in the load causes the current to lag behind the voltage, whilst a capacitance will cause the current to lead the voltage. If the reactance of the inductance exactly equals the reactance of the capacitance then they cancel each other and only the resistance is left for the load. In practice, all inductances and capacitances contain some resistance, therefore it is the total resistance which consumes power.

Thus the angle of lag or lead of the current is a function of the amount of inductance, capacitance and resistance which is present in the circuit.

The power factor is the cosine of this angle of displacement and it can be measured by an instrument known as a power factor meter.

There are two types of these meters. One is the electro-dynamic and the other is a moving-iron type.

Power factor measurements may be made, too, by using a voltmeter, an ammeter and a wattmeter when:—

$$\cos \phi = \frac{\text{watts}}{\text{volts} \times \text{amperes}}$$

In the electro-dynamic type of power factor meter there are two coils of heavy wire. These are connected in series with each other, the combination being in series with one leg of the a.c. line. These are current coils, as they carry the line current.

Between these coils, suspended on pivots, are two coils physically attached to each other but spaced 90° apart in the form of a cross. These are both voltage or pressure coils. One end of each coil is connected to one leg of the line as shown in Fig. 12. Then the free end of one of the coils is connected to the other leg of the line through a resistance. This leg of the line is connected to the other coil through an inductance. The resistance and inductance make up a phase splitting device and as a result of this the currents in the two coils are approximately 90° part. This in effect produces a rotating magnetic field.

The driving torque required to move the voltage coils depends on the interaction of the fluxes from the two voltage coils and those from the two current coils, and is dependent on the actual phase displacement between the current and voltage in the system.

Therefore the moving coils take up a fixed position which depends entirely on the power factor of the load and their position only changes if the power factor changes. The scale follows a cosine law with an arc of about 90°.

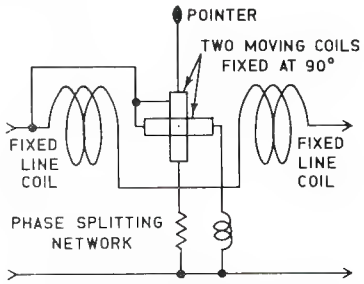

CIRCUIT OF A SINGLE-PHASE POWER-FACTOR METER
FIG. 12

The second type of power factor meter is the moving-iron or induction type. The pointer is free to move through 360° in either direction. The pointer is attached to moving irons which are specially shaped and displaced by 180° from each other. The irons are enclosed by a polarising winding which is connected across the voltage. Two other coils are arranged to surround the moving irons and the polarising winding and are displaced from each other by 90°. These coils are connected to a phase splitting network.

The principle of operation is similar to the electro-dynamic type as the torque is proportional to the phase displacement between the current and voltage in the system.

The power factor meters described are for use in single-phase systems, however there are P.F. meters available for poly-phase systems. These are similar to the single-phase meters just described except that the phase-splitting networks are not used, instead the angular displacement of the phases is used to obtain the rotating field.

The three-phase balanced load type may use a single current coil and three voltage coils, alternatively it may have three current coils and one voltage coil, but for three-phase unbalanced loads the power factor meter will have three voltage and three current coils.

THE SYNCHROSCOPE

When an a.c. generator is to be connected to an existing a.c. supply it is necessary for the machine to be brought up to the correct speed so that its frequency is the same as that of the a.c. supply and **most importantly** the phase-angle must be as close to the phase-angle of the supply as possible, before the machine is switched into circuit. Provided that the phase-angle of the machine is very close to that of the supply then the a.c. generator will pull into synchronism as it will be delivering negligible power. As soon as synchronism has been achieved the generator's primary drive and its excitation can be increased so that it will deliver power into the a.c. supply.

There are several methods of checking the phase-angle difference between the generator and that of the supply but only one will be described.

This is a modified form of single-phase power factor meter with both sets of coils arranged for connection as voltage coils. One set of coils is fed with voltage from the a.c. supply and the other set of coils with voltage from the a.c. generator.

When the current and voltage of the generator are in phase with that of the a.c. supply an oscillating field results and the pointer of the instrument remains steady. However, if there is a phase difference between them then a partially-rotating field results. If the voltage remains constant then the strength of this field is proportional to the product of the current and the sine of the angle of lag or lead $= C \sin \phi$.

By allowing this rotating field to act on a pivoted disc, a deflection is obtained proportional to $C \sin \phi$.

A typical synchroscope has circular scale with a mark at the top centre. Arrows on each side of this mark are marked to indicate lag or lead, thus enabling an operator to know if a generator being brought onto line has a phase-angle which is lagging or leading the a.c. supply.

This section on synchroscopes has been included as there have been cases to the writer's knowledge where a radio station's own power plant has been used to feed power into a power supply authority's system during a period of acute power shortage. These have been cases where the station has had an excess of generating capacity over that needed to operate the station itself. There have been cases, too, where a station generates all its own power and when it became necessary to change from one a.c. generator to another the two generators would be connected in parallel to avoid closing down the station whilst the switch-over was being made.

If an a.c. generator is connected to the a.c. supply mains or to another

* 6 Adrian Street, Colac, Vic., 3250.

STOP RUST OUTDOORS TWO YEARS . . . OR MORE!

Lubricates Penetrates Stops Rust

DRY YOUR ELECTRICAL SYSTEMS
with LPS — the NON-GREASY ONE

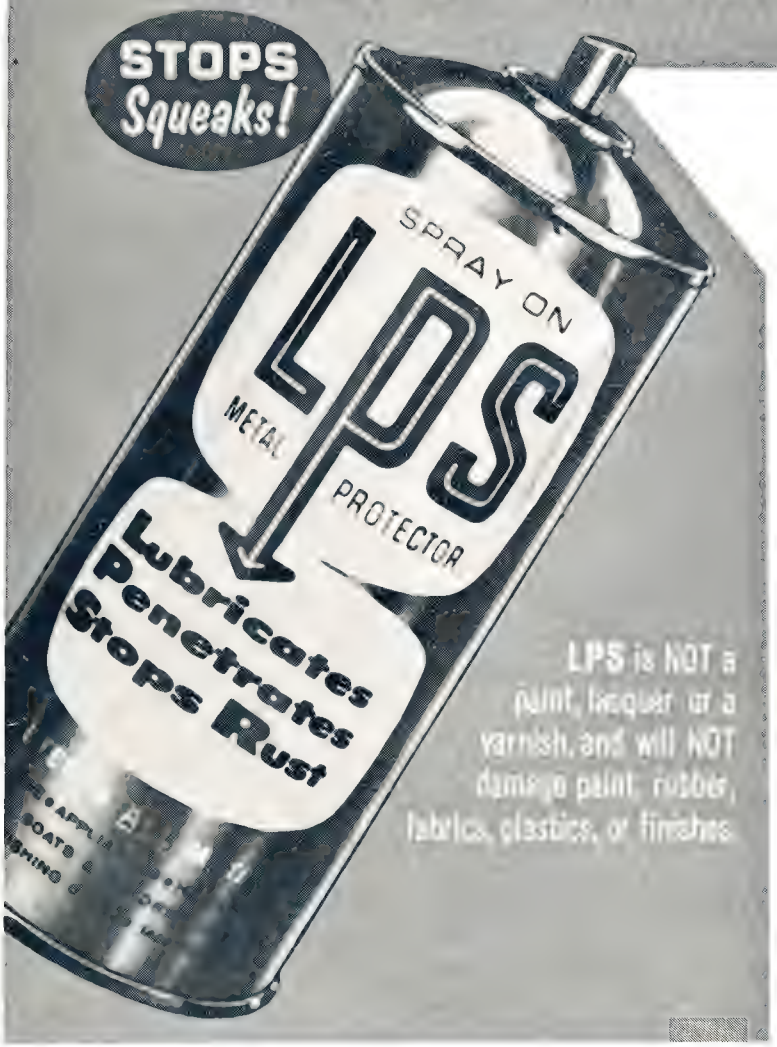

Displaces Moisture Fast!

TECHNICAL INFORMATION

Physical Properties:

LPS 1

Less than 0.0001 inch non-greasy molecular film with capillary action that spreads evenly and easily to seal out moisture at very low cost.

Rust Inhibitor: Protects **all** metals from rust and corrosion.

Water Displacing Compound: Dries out mechanical and electrical systems fast.

Lubricant: **Lubricates** even the most delicate mechanisms; non-gummy, non-sticky; does not pick up dust or dirt.

Penetrant: Penetrates to loosen frozen parts in seconds.

Volume Resistivity per ASTM D-257: Room temperature, ohm/cm.; 1.04×10^{12}.

Dielectric Constant per ASTM-877:
Dielectric Constant 2.11, Dissipation Factor: 0.02.

Dielectric Strength per ASTM D-150:
Breakdown Voltage 0.1 inch gap, 32,000 volts.
Dielectric Strength volts/inch, 320,000 volts.

Flash Point (Dried Film), 900 degrees F.
Fire Point (Dried Film), 900 degrees F.

TESTS AND RESULTS: 950 degrees F.

Lawrence Hydrogen Embrittlement Test for Safety on High Tensile Strength Steels: Passed. Certified safe within limits of Douglas Service Bulletin 13-1 and Boeing D6 17487.

Mil. Spec. C-16173 D-Grade 3, Passed.
Mil. Spec. C-23411, Passed.

Swiss Federal Government Testing Authority for Industry: Passed 7-Day Rust Test for acid and salt water. Passed Weiland Machine Test for Lubricity as being superior to mineral oil plus additives.

LPS Products conform to Federal Mil. Specs. C-23411 and/or C-161730

LPS

HOW LPS SAVES YOU TIME AND MONEY

1. LPS PROTECTS all metals from Rust and Corrosion.
2. LPS PENETRATES existing rust—stops it from spreading.
3. LPS DISPLACES moisture on metal—forms fine protective film.
4. LPS LUBRICATES even the most delicate mechanisms at extreme temperatures.
5. LPS PENETRATES to free rust frozen parts, nuts, bolts, etc.
6. LPS PREVENTS equipment failures due to moisture (drives it out).
7. LPS LENGTHENS LIFE of electrical and electronic equipment—improves performance.
8. LPS RESTORES equipment damaged by water contamination and corrosion.
9. LPS PENETRATES AND PROTECTS plated and painted metal surfaces.
10. LPS PROTECTS metals from salt atmosphere, acid and caustic vapours.
11. LPS LOOSENS dirt, scale, minor rust spots and cleans metal surfaces.
12. LPS ELIMINATES squeaks where most everything else fails.

Sole Agents:

ZEPHYR PRODUCTS PTY. LTD., 70 BATESFORD ROAD, CHADSTONE, VIC., 3148 Phone 56-7231

generator when it is not synchronous considerable damage may occur. Again to the writer's knowledge there has been an occasion when a very large a.c. generator was switched to an a.c. supply and accidentally it was 180° out of phase. This resulted in many thousands of dollars damage.

It is only proper to point out that very few Authorities will permit any switching that will allow a privately owned a.c. generator being able to be switched to the a.c. supply.

FREQUENCY INDICATORS

There are a number of different methods of measuring the frequency of an a.c. generator. Probably the commonest instrument consists of a number of magnetic reeds of different lengths located near an electro-magnet which is energised from an a.c. source. Only those reeds whose free natural period of vibration is half the frequency of the a.c. supply will vibrate. This type of indicator is known as a vibrate "vibrating reed" or "resonance" meter and sometimes is referred to as a "cycle meter" which can be a bit confusing to one not familiar with this term in relation to electrical work.

ELECTRO-STATIC VOLTMETERS

In some cases it is desirable to measure high voltages where no current or power may be taken from the circuit. Where the moving-coil type of instrument is not suitable, use is made of the electro-static voltmeter.

There are two basic types. One depends on the attraction between two plates (for very high voltages), whilst the other uses pivoted vanes (one fixed and one movable as in a two-plate variable condenser).

When used on d.c. no current passes between the vanes but on a.c. there will be a small current, as with any capacitor, but the current is out of phase so there is no power component other than the very small loss due to the dielectric.

Attraction between the vanes is proportional to the square of the voltage so this type of instrument works equally well on d.c. as on a.c. giving the r.m.s. voltage.

HOT-WIRE AMMETERS

Ordinary a.c. ammeters already described are not suitable for the measurement of radio frequency currents, so in the early days of wireless an ammeter was developed which made use of the expansion characteristics of a wire such as platinum-iridium alloy. This type is obsolete.

THERMO-COUPLE AMMETERS

Certain metals, such as steel and constantan, bismuth and antimony, will produce an e.m.f. if brought under contact pressure at high temperature. The heat which produces the e.m.f. is produced at a rate which is proportional to the square of the current which flows through the junction of the metals. This junction is known as a "thermo-couple". A direct-current milli-voltmeter may be connected across the thermo-couple to measure the e.m.f. which has been generated.

As the e.m.f. is proportional to the heating of the thermo-couple, and as the heat increases as the square of the current flowing through the thermo-couple, then the e.m.f. increases as the square of the current flowing through the thermo-couple.

Thus the scale of the meter may be calibrated in evenly spaced heat units and the meter will be known as a current-squared meter. Alternatively, it may be calibrated in current units when it becomes an ammeter or milli-ammeter.

It is not necessary for the thermo-couple to be built into the meter case. In many radio transmitters the thermo-couple will be located in the most advantageous place in the circuit and the meter movement mounted some distance away, say, on the front panel of the transmitter.

However, it is important to realise that there is metallic contact between the heater and thermo-couple, so if the heater is at a high potential above ground, so then will be the meter movement.

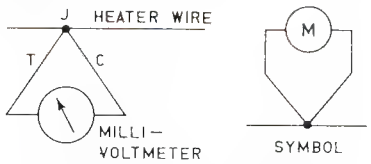

THERMO-COUPLE AND METER
J IS THE JUNCTION OF THE TWO DIFFERENT WIRES, T AND C, WHICH MAKE UP THE THERMO COUPLE.
FIG. 13

Thermo-couple ammeters may range from about 50 milliamperes full scale to hundreds of amperes full scale.

The thermo-couple ammeter is very rugged and has great accuracy, also for all practical purposes it does not add inductance, capacitance and resistance to the circuit in which it is included. Therefore it will measure with equal accuracy from d.c. up to very high radio frequencies.

When used in radio frequency transmission lines and in aerials, it is quite common to use a shorting switch across the meter terminals to avoid burn-out due to near-by lightning discharges, however these switches can lead to meter errors, when the switches are opened, because of their capacitance, as they may appear as though a small capacitance is connected across the meter terminals. At d.c. and low frequencies this will not cause trouble but may do so at high frequencies.

It is most important to realise that a thermo-couple ammeter will read with equal and great accuracy on both **d.c. currents and a.c. currents** up to high frequencies (30 MHz. at least).

INSTRUMENT TRANSFORMERS

Reference was made earlier to "current" and "voltage" transformers which are used to increase the range or safety where a.c. instruments are concerned.

There are two types of instrument transformers. These are "current" and "voltage or potential" transformers.

Special types of current transformers are sometimes used with thermo-ammeters at radio frequencies.

The Voltage Transformer

This has its secondary working into a high impedance load such as a voltmeter or the pressure coil of a wattmeter or watt-hour meter. In comparison with their own internal impedance, voltage transformers operate almost as though the load, which is known as a Burden, is an open circuit.

Voltage transformers consist of two coils of a different number of turns magnetically coupled by a ferro-magnetic core of special nickel-iron alloy of high permeability and low loss.

The low voltage secondary is connected to a voltmeter, which forms the burden and is specified by the total volt-amperes and power factor at a specified frequency.

For any given frequency the ratio of primary to secondary volts is not linear. The change from linearity is greater the ratio of magnetising current to primary current and the greater the magnetic leakage of the transformer. Accuracy is obtained by designing the transformer for low magnetic leakage and low magnetising current. If the transformer is to be used with a watt-meter or watt-hour meter, then it is necessary to reduce as far as possible the phase angle between primary and secondary vectors. This, too, means low magnetic leakage and low magnetising current. The same remarks apply for any other instrument which is critical of phase.

Probably the main use for the voltage transformer is to enable very high voltages to be measured in safety as great care is taken in manufacture to provide adequate insulation between primary and secondary. It is quite a common practice in electricity undertakings to arrange a.c. distribution in terms of voltages which are multiples of 110, i.e. 220, 440, 6,600, 33,000, 220,000 volts, and it is common, too, to use a voltmeter having a full scale deflection of 110 volts, the scale being calibrated in terms of the primary voltage. It must be clearly understood that not all undertakings in Australia use the voltages mentioned, in fact there are great differences.

The Current Transformer

Current transformers are used mainly to enable a very large current, at possibly a very high voltage point, to be measured on a low range ammeter, and possibly at a distance from the position at which the actual current is to be measured. For instance, it may be desired to measure the current in a high voltage transmission line, many feet above ground, and the practical way to do this is to insert a current transformer in the transmission line, if single phase and more if polyphase, whilst the actual measuring ammeter may be in a switchboard at eye-level.

The current transformer is designed for its primary to be connected in series with the load. The core flux is produced by the magnetising ampere-turns which is the vector sum of the primary and secondary turns. Should the secondary become open-circuited this becomes the full primary ampere-turns

(Continued on Page 15.)

Commercial Kinks

With Ron Fisher,* VK3OM

THE YAESU FT200

But first off I must make an apology for the non-appearance of the notes on vox units as promised in the July issue. We ran into a few problems with copyright of the circuits, so until this is cleared up in the near future this particular article will be held over. However, the additional notes on the Trio 9R 59D must have filled a need if the amount of correspondence I have received over the last few weeks is any indication. I am working on more modifications for this series of receivers and along with some of the experiences and problems of readers, you can look forward to more in the near future.

It would indeed be hard to find a piece of commercial gear so universally accepted as the Yaesu FT200. This rig must surely have put more Australian Amateurs on s.s.b. than any other, or perhaps all other transceivers, transmitters and receivers combined.

It must also stand as a tribute to the designers of the FT200 that in its three years on the Australian market very few problems have come up and certainly none of them serious. Also, the latest model is very little different to the original FT200 of three years ago. Some of the differences are, however, interesting and will be discussed during the course of these notes.

First though, some service notes. The Australian Agents for Yaesu, **Bail Electronic Services**, have compiled a most informative trouble shooting guide on the FT200 and with their kind permission I intend to reproduce this over the next couple of months. Even if you don't own an FT200, I think you will find many of these hints applicable to your rig.

Sympton: Transmitter output down; low operating IC; low IC off tune. Probable cause: Faulty p.a. tubes. Cure: Replace tubes.

Sympton: Transmitter not operating; no p.a. resting IC; receiver okay. Probable cause: P.a. inoperative. Cure: Check that the 11-pin accessory plug is plugged into socket at rear of set. Refer to instructions book for details. If the p.a. is still inoperative, then check h.t. voltage, bias and p.a. components.

Sympton: Output low on all bands; standing IC okay. Probable cause: Driver circuits out of alignment. Cure: Re-align all stages as per the instruction book.

Sympton: No p.a. dip obtainable on 80 metres; indications of p.a. oscillations. Probable cause: High gain in driver causing oscillation. Cure: Try installing a 22K ½w. resistor on 80 metre switch contact, similar to the 10K resistor R64 which is in circuit on 40 metres.

Sympton: No output on 80, 15 and 10 metres. Probable cause: Faulty sideband crystal. Cure: Check in the reverse sideband position and if output becomes normal, suspect the sideband crystal and replace. This problem can also be caused by faulty components associated with the carrier oscillator tube V106 and will also show up as lack of sideband reception. That is, a.m. only reception in all function switch positions.

Sympton: Transmitter output low on 21 MHz. and weak reception. Probable cause: Maladjustment of trap L22. Cure: Adjust as per instructions book.

Sympton: Transmitter output down and poor c.r.o. pattern on the lower frequency bands; output normal on 10 metres and on 15 metres, but plate tuning in 40 metre position; insulation burnt on h.t. lead to p.a. r.f.c.; p.a. coil slightly discoloured showing signs of overheating. Probable cause: 15 metre tap shorted to 10 metre tap on p.a. coil. Cure: Separate and re-solder any shorted taps.

Sympton: Transmitter output down or receiver insensitive on one band only. Probable cause: Misalignment of driver circuits on defective band. Cure: First try the other bands to confirm that these are okay. Re-align driver and r.f. coils on defective band. Also check any appropriate heterodyne crystal.

Sympton: Receiver losing sensitivity accompanied by low drive or variation in transmitter output. Probable cause: Fault in L12, r.f. driver plate coil, possible dry joint or open circuit. Cure: Repair coil or re-solder as necessary.

Sympton: No a.l.c. reading or incorrect zero setting of meter on a.l.c. Probable cause: First i.f. tube or metering circuit. Cure: Check V104 and all a.l.c. circuitry. Note that the meter reads in reverse for a.l.c. and provides an indication of effect of a.l.c. voltage by reading V104 cathode current. The meter zero is a full scale deflection of the needle. To adjust "zero" switch transmitter to s.s.b. Mike gain off. Meter switch to a.l.c., rec./opr. switch to opr., press mike p.t.t. button and adjust the small preset pot VR101 on top of the printed circuit board next to the crystal filter. I have noticed in quite a few FT200s that the meter zeros right at the extreme setting of VR101, or in many cases will not quite reach zero. Replace R122 with either a slightly larger or smaller value. Its size varies in production models from 1K to 1½K ohms. Also the value of the a.l.c. zero pot has been changed from 1K to 2K in later models.

More trouble shooting next month, but before ending, one quick modification. If you have operated some of the better sideband receivers or transceivers the first thing you will notice when using the FT200 is the excessively fast a.g.c. decay. It is so fast that even the S meter is hard to read. The remedy is simple, a bit more capacity across the a.g.c. line. A value of 0.22 to 0.33 μF. appears to be about right and the best place for it is across C124. Some of the perfectionists say you should wire a 100K resistor in series with the new condenser so that the a.g.c. attack is not slowed down too much. However, I have found no noticeable difference either way.

While on the subject of the received signal, another simple change comes to mind. In the earlier models the cathode of the product detector V102A was earthed through a small r.f. choke L106. It seems that there was insufficient d.c. resistance to produce adequate bias. In the current series this choke has been replaced with a 100K ½w. resistor, which has made a marked improvement to strong signal reception. If you find that signals over S9 sound better with the r.f. gain backed off, give this one a try.

I'll be back again next month with more on the FT200.

TRANSCEIVER TYPE NUMBERS

No doubt readers of overseas magazines have noticed advertisements for Yaesu Musen transceivers, but with different type numbers and in some cases different even in name. In Europe Yaesu has been sold under the name of Sommer Kamp and in the U.S.A. Tempo. These are both manufactured by Yaesu in Japan and are identical to types sold here in Australia. Here is a handy reference guide to identify the various types:

Yaesu Musen	Sommer Kamp	Spectronics
FT-DX100	FT-DX101	—
FT101	FT727/277	FT101
FT200	FT250	Tempo 1
FT-DX400	FT-DX500	FT-DX560
FT-DX401	FT-DX505	FT-DX570
FT-DX560	FT-DX747	—

This information has been supplied to us by the advertisers in "A.R." of Yaesu equipment.

* 3 Fairview Avenue, Glen Waverley, Vic., 3150.

The Government Surplus Wireless Equipment Handbook

This valuable book contains full **circuit diagrams, illustrations** and **components lists** with **parts lay-out** for all types of **British** and **American** surplus equipment including **communications receivers, transmitters, trans./rec., walkie-talkies, UHF** and **VHF** equipment, **wavemeter, oscilloscope** and **test equipment. Modifications** to equipment are incorporated. Every page is packed with data on a wide range of surplus including the later releases. A surplus/commercial cross reference transistor and valve guide is provided. The book has proved invaluable to amateurs, communications engineers and equipment designers throughout the world.

Price incl. surf. mail postage, $A9.
Two copies sent for $A16.
Cheque, international money order, or cash accepted.

(Dept. AR)
GERALD MYERS
18 Shaftesbury St., Leeds LS12 3BT, Yorkshire, England

Two Metre Frequency Allocations

A Special "A.R." Report on the Albury Conference, 8th and 9th July, 1972

● The purpose of the Conference was to consider proposals initiated by the Victorian Division that existing FM Repeater frequencies be changed to prevent a clash with frequencies allocated to International Amateur Satellites.

The Conference was chaired by the Federal President, Michael Owen, and was open to all interested parties whether members of the W.I.A. or not. Official Divisional representatives were present from VKs 2, 3, 4, 5 and 7, and a written submission in favour of the Victorian Division's proposals was submitted by the VK6 Division. Assisting Mr. Owen were the Federal Vice-President David Rankin and chairmen of the Australis Committee, Federal Repeater Secretariat and V.h.f. Advisory Committee.

Institute policy could not be decided by this meeting. However, resolutions arising from it will be forwarded to the Federal Council in the form of recommendations, and it is anticipated that considerable weight will be attached to any proposals clearly favoured by those present.

In addition to the proposed frequency changes, matters relating to the planned allocation of future Repeater input/output frequencies, simplex net frequencies and channel numbering systems were discussed.

As a result of motions passed by the Conference, the following **recommendations** will be forwarded to the Federal Council for consideration.

1. That the frequencies of the existing FM Repeater channels be moved above 146 MHz.
2. That these Repeater channels be established with Repeater output frequencies 600 kHz. above their respective input frequencies, and that this system be adopted as a standard for future Repeater allocations.
3. That the existing Repeater frequencies be changed as follows:—

	In MHz.	Out MHz.
Channel 1	146.1	146.7
,, 2	146.2	146.8
,, 3	146.3	146.9
,, 4	146.4	147.0

4. That provision for future Repeater channels be established on 50 kHz. spots around the above four channels, but within the band segment 146.0 to 147.0 MHz., along the following lines:—

In	Out
146.15 MHz.	146.75 MHz.
146.25 ,,	146.85 ,,
146.35 ,,	146.95 ,,

5. That if implemented by Federal Council, all Repeater channels within the band segmented 146.0 to 147.0 MHz. be made available for commissioning as desired by Divisions.
6. That 146.45, 146.50, 146.55, 146.60 and 146.65 MHz. be adopted as national simplex FM net channels.
7. That 146.5 MHz. be adopted as the national FM net calling frequency in lieu of 146.0 MHz.
8. That 146.6 MHz. be adopted as the national FM teletype net frequency.
9. That the present form of channel identification be replaced by a sequential numbering system based upon 50 kHz. spots throughout the 2 metre band allocation. 144.00 MHz. to be known as channel 0, 144.05 as channel 1, 144.10 as channel 2, etc., through to 148.00 MHz. channel 80. On this basis, 146.00 MHz. would be channel 40, 146.05 channel 41, 146.10 channel 42, etc. In the case of Repeater channels, the channel number to be derived from the Repeater input frequency. Further discussion between interested parties is anticipated on this matter.
10. That 1st November, 1972, be set as a date for change over of existing Repeater frequencies.
11. That existing simplex FM net frequencies be rounded to the nearest 50 kHz. spot and that this be implemented on 1st November, 1972.

Measuring Instruments

(Continued from Page 13.)

and the transformer may be damaged because of excessive flux overload.

The term "load" when used with current transformers refers to the magnitude of primary current, and the instrument connected across the secondary is known as the "burden".

One factor in the design of a current transformer is the number of primary ampere-turns and if the primary current be high, then all that may be necessary is one turn.

Sometimes the primary consists of a straight bar. This may be confusing but may be explained by stating that "the whole primary circuit" is in fact the complete primary winding, even if "the whole primary circuit" is many miles in length, such as in an a.c. supply system.

The current and voltage transformers described have been for use at power-line frequencies.

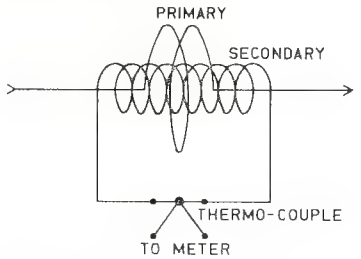

CIRCUIT OF ONE TYPE OF R F. CURRENT TRANSFORMER.
NOTE THAT THERE IS NO DIRECT ELECTRICAL CONNECTION BETWEEN PRIMARY AND SECONDARY AND THAT THE TRANSFORMER IS AIR-CORED

FIG. 14

Current transformers are used by some manufacturers of radio transmitters and associated equipment for radio frequency measurements. For instance, here at 3CS, we use a number of r.f. current transformers, of two types.

The first type has one or more turns of heavy gauge plated copper tubing as the primary, wound on a large diameter. The secondary, of many turns of fine gauge wire, is arranged so that the coupling between primary and secondary is adjustable. The secondary is connected to a thermo-couple in the base of the transformer and this in turn is connected to a meter located several feet from the thermo-couple.

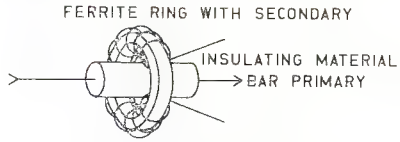

R F. CURRENT TRANSFORMER WITH BAR-PRIMARY

FIG. 15

The bar-type of transformer is used too. This consists of a straight bar, enclosed in insulating material, and forms the primary of the transformer. In the length-wise centre of the bar there is a ferrite ring, with several turns of wire, mounted over the bar insulating material. The secondary may be connected to a nearby meter, by means of co-axial cable to a distant meter. In one of our cases the distance is over 300 yards. ●

☆

DIRECT KEYING OF TX

(Continued from Page 9.)

Finally, a word of warning. When the correct value of parallel resistor has been found, solder it directly across the collector and emitter terminals of the transistor and do any switching or connecting elsewhere.

This keying system has been in use by the writer with an FL100B, and by a friend using an FL-DX-400, for about two years. Another friend has been using it with an FT-DX-400 for about six months.

NEWCOMER'S NOTEBOOK

With Rodney Champness,* VK3UG

CHEAP PARTS FOR CONSTRUCTION PROJECTS

If you are a struggling student or a married man with a young family supplies of cheap, but good, parts are essential.

Some people believe that only new parts can be used in projects and in some cases it is most desirable that this should be so. New components are often available at trade price or better through some of the smaller sellers who advertise through "A.R." and other electronics magazines. You can be assured of good sensibly priced components through the W.I.A. components sales section located in Melbourne. It will be found that these components and those advertised by the small sellers are mostly suited for transistorised projects.

For those who are quite happy to use valves—old t.v. chassis provide quite a few useful parts. Old t.v. sets whole or chassis only can sometimes be had for the asking or for only two or three dollars. It is important to know what parts are useful and which are of no value to you at all. For a start, all the paper capacitors can grace your rubbish bin. About 80% or more will be leaky if tested at about 150°F. Polyester, styroseal and mica are usually satisfactory although it will pay to check for shorts. Resistors are usually good but should be tested individually with an ohmmeter and discarded if more than 20% away from the marked value.

In quite a few sets the component leads are very short and the components are not easily salvaged. Some have quite long leads which means the leads can be cut where the component is soldered and still leave a reasonable length of lead to work with. It is not practical in most sets to unwind the leads from around the solder tags without overheating everything. The tag strips can often be salvaged by using sidecutters and cutting any apparent pigtail lead wrapped around a particular tag and then de-soldering it.

Potentiometers are usually satisfactory, but can be given a reasonable test by checking for smoothness of resistance change as the control is rotated. An ohmmeter is connected between the centre terminal and an outer terminal. Before discarding a suspect potentiometer spray the works with CRC2.26 or similar and see if any improvement results. If not, of course, the bush can be used as a shaft panel bush.

Electrolytic capacitors, if they look all right physically, should be checked with an ohmmeter, one lead to each terminal. The needle should kick up and then settle down to read a resistance of quite a few thousand ohms. If neither of the above occurs, the electrolytic is likely to be faulty. A more conclusive test is done on a CR bridge.

The power transformer is quite a valuable item in a t.v. set, particularly in the sets using a valve type rectifier. The transformer is usually sufficiently big to run an a.m. rig of from 60 to 100 watts d.c. input. Before stripping the transformer out of the set make a note of all the leads and where they go and what their purposes are. This can save you time later.

The various coils provide quite a few formers for new coils. The speaker and vertical transformers are suitable for audio work. Some vertical transformers could well be suitable for low power modulator transformers. The e.h.t. transformer seems to have little use as is, but the core is suitable for d.c./d.c. converters.

The valves in a t.v. set may or may not be any good. A large number of 6BX6s, 6BM8s, 6CM5s, 6DQ6As, 12AU7s. 6BL8s, etc., are found in sets. 6BX6s are good i.f. valves without a.g.c., for v.f.o's or crystal oscillators to mention but a few uses. 6DQ6As are good for modulator valves and good p.a. valves up to 6 metres. I have personally achieved about 75% efficiency at h.f. Some valves which are reputed to be troublesome in t.v. sets, such as the 6GV8 vertical valve, work well in other jobs. The 6GV8 works well as a low voltage audio valve, h.t. series regulator or an r.f. transmitting valve.

Very little else is of value in a t.v. set, the chassis may be of use but often they are of awkward shapes and have too many holes in them.

A number of people use aluminium for chassis, a cheaper material is galvanised sheet steel which is more rigid and can be soldered. Tin plate of heavy gauge can also look quite effective and the lighter gauges are suitable for under-chassis shields. Have a browse through various hardware stores and using a little imagination quite a number of hardware lines will be found which make cheaper alternatives to conventional radio lines—if available. Cupboard handles, heavy knitting needles for insulated shafts, and so on. Perhaps you have a few thoughts on what items could be used for radio work. If so, drop a line with your thoughts.

Next month I will deal with overhauling old broadcast and shortwave receivers and converting them for Amateur use.

* 24 O'Dowds Road, Warragul, Vic., 3820.

★ AMATEUR RADIO MAGAZINE SUBSCRIPTIONS

★ AMATEUR RADIO PUBLICATIONS

Available through Divisions or from Business Manager

WRITE FOR NEW LIST

Regulations and Licensing

In reply to submissions by the Institute the Director-General of the P.M.G's Department has transmitted the following communications to the Federal Manager:—

REPEATER CALL SIGNS

With reference to your letter of 2nd May, 1972, and recent discussions, the call sign group VKXRAA - RAZ has been reserved for identification of Amateur repeater stations in lieu of the existing arrangement which, as you know, comprises the normal call sign of the operating W.I.A. group followed by the suffix R/1, 2, etc. The letter "X", of course, represents the State numeral.

Advice in this regard has been forwarded to the Superintendent of the Radio Section in each State, and local W.I.A. groups which are at present licensed to operate repeater stations should make arrangements with the Superintendents to have the call signs changed if they so desire. Future stations will, of course, be allotted call signs from the new series.

OSCAR REPEATER

With reference to your letters of 1st and 2nd May, 1972, and discussions with Mr. Williamson and myself, approval is given for:—

(a) The establishment and operation of a terrestrial repeater station to be used in a fixed or mobile capacity for demonstration purposes prior to the launching of the next Oscar Satellite; and

(b) Limited Amateur station licensees who will use both the terrestrial and space repeater stations to receive transmissions from other Amateur operators relayed by the repeater station on a frequency below 52 MHz.

The call sign VK(X)RZZ (X being the State numeral) is allotted for identification of the terrestrial repeater station. Stations communicating through the repeater stations will be subject to normal identification procedures.

[Because this repeater is intended for use in several States, the call sign VKXRZZ was allocated as an exception to the general rule.—Ed.]

AX CALL SIGNS

Careful consideration has been given to your letter of 2nd May, 1972, regarding the use of Amateur call signs prefixed by the letters "AX" during special occasions.

The decision has been reached, however, that approval for such an arrangement will be restricted to occasions of major national importance. It is considered that if the privilege was extended in the manner you have proposed that the value of the distinction would be lessened.

Reciprocal Licensing

The following correspondence is published for general information as the contents demonstrate liberalisation in relation to reciprocity for visiting Amateurs from any part of the world.

2nd May, 1972

The Controller,
Regulatory and Licensing,
P.M.G's Department,

Reciprocal Licensing

Dear Sir,

Another matter on which we spoke together briefly the other day concerns reciprocal licensing.

As I mentioned to you it appears that in many countries this question is dealt with on two separate planes. Firstly, there is the question of issuing licences to bona fide tourists as occurs in Europe in particular and since extended to many other countries in the world. Secondly, there is the separate question of issuing licences to intending residents and those people intending to change their domicile from one country to another.

In relation to the second of these questions there is little doubt that the authorities in the "receiving" country may require to be satisfied about a number of issues not directly related to the Amateur Service per se. For example, the security question.

However, in connection with bona fide visitors the position has been very considerably liberalised in many countries, as, for example in Belgium where a Belgian licence is issued to any Amateur from any country producing proof of being licensed in his own country of abode. I admit that possibly the bulk of visitors to such countries would operate mobile but this, as far as I know, is not a licence condition. If such visitors subsequently decided to remain for an indefinite stay, I have no doubt that the local Regulations would be trotted out and the person would "have to toe the line" to the same extent as residents.

Here in Australia, the tourist potential is considerable and is under expansion, but at the same time distances are great in order to get here. Hence, a visitor to these shores, except from New Zealand, would not ordinarily remain here for only a few days or a week or two but might be expected to tour about for up to two or three months at a time. Reciprocity for bona fide tourists and visitors for up to say three months maximum is therefore suggested.

I hope this can receive consideration.

Yours sincerely,
P. B. Dodd, Manager.

29th June, 1972

Mr. P. B. Dodd,
Manager, W.I.A.
Dear Sir,

With reference to your letters of 2nd May, 1972, careful consideration was given recently to the whole question of the issue of Australian Amateur station licences to persons visiting or taking up residence in this country who either hold, or are qualified to hold, Amateur station licences issued by the Administrations of their own countries.

As you know, it has been the practice in the past to issue Australian licences to persons whether they were visitors or settlers from other countries only if they held qualifications considered to be equivalent to what is required of an Australian Amateur, and on the understanding that Australian Amateurs would be granted reciprocal rights by the other Administration concerned.

It has been decided that there will be no change in this policy as far as persons desiring to settle permanently in Australia are concerned.

In the case of visitors, however, the Department, in future, will issue an Australian Amateur licence to a qualified Amateur from overseas for a period not exceeding 12 months on the understanding that:

(a) The category of licence (restricted or full privilege) will be determined by the class of operator's certificate or licence held by the applicant;
(b) The visiting Amateur will receive no greater privileges as far as frequency bands, power, etc., are concerned than he is eligible for in his own country; and
(c) There is strict compliance with Australian Amateur conditions.

Applicants for licences should write to the Controller, Regulatory and Licensing Section, Radio Branch, P.M.G's Department, 57 Bourke Street, Melbourne, well in advance of their proposed visit. A photostat copy of their licence or certificate should be enclosed and, if not evident from these documents, an indication given of any operating restrictions which have been applied to them by the issuing Administrations.

The Controller will then advise the applicant of the class of Australian licence which will be issued to him and forward for his completion an application form RB80 and a declaration regarding the secrecy of wireless communications, Form RB127. The licence will then be made available for collection or despatch to the applicant on payment of the prescribed fee of $6.00 (Australian) either at the office of the Controller or by the Superintendent (Regulatory and Licensing) Radio Section in the State of arrival.

It is not the normal practice to issue "C" series call signs to visiting Amateurs, but they would be granted approval to operate in a mobile capacity during their stay in Australia if this was justified.

Attached is the latest statement showing other Administrations with which Australia at present has a reciprocal licensing arrangement and the respective Amateur qualifications which are acceptable for issue of Australian Amateur licences.

There, of course, is no objection to the publication of the abovementioned information in "Amateur Radio".

Yours faithfully,
H. S. Young,
for Director-General.

Statement showing eligibility of Persons holding various Overseas Amateur Licences and Operators' Certificates for Australian Amateur Station Licences under Reciprocal Agreements

Administration	Class of Certificate or Licence held	Australian Amateur Licence for which holder is eligible	Remarks
U. Kingdom	British Amateur (Sound) Licence	Full Privilege	
	British Amateur (Sound) Licence A	Full Privilege	
	British Amateur (Sound) Licence B	Limited	
U.S.A.	Extra Class Licence	Full Privilege	
	Advanced Class Licence	Full Privilege	
	General Class Licence	Full Privilege	
	Conditional Class Licence	Full Privilege	
	Technician Class Licence	Limited	
	Novice Class Licence	—	Not acceptable.
Canada	Advanced Am. Rad. Op. Certificate	Full Privilege	
New Zeal'd	N.Z. Amateur Operator's Certificate	Full Privilege	
	N.Z. Amateur Operator's Certificate (non Morse)	Limited	
Malaysia	Current Amateur Station Licence	Full Privilege*	* Where applicant furnishes acceptable evidence that he has qualified in telegraphy at a speed of 12 or more words per minute.
	Current Amateur Station Licence	Limited†	† Where no acceptable evidence is furnished of telegraphy qualifications.
Singapore		Same as for Malaysia	
India	Amateur Wireless Telegraphy Station Licence	Full Privilege	
Switzerland	Amateur Radio-Telegraphist's Certificate (Transmission)	Full Privilege	

F.M. AT BEDSIDE

Making the most of a several-week stay in Wollongong Hospital (N.S.W.), Barry Lacey, VK2ZYL/T, set up his home-brew solid-state 2 metre f.m. transceiver at his bedside.

Using a vertical dipole supported from the side of his bed, Barry made many contacts from his 7th floor wardroom. Barry's operation which took several hours straightened out his right hip and was a forerunner to another operation when he returns shortly for a complete replacement of the left hip.

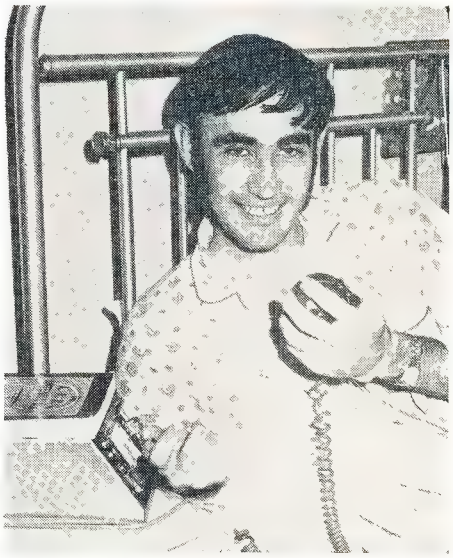

Barry VK2ZYL/T at the controls of his home-brew 2 metre f.m. transceiver.

☆

THE "WIPERTATOR"

(Continued from Page 8.)

proof the terminals. Install the unit on the mast with the bearing of 0° = True North. Radiator hose clips, either galvanised or stainless steel, are ideal for attachment. A number of these may be used in series to obtain the necessary length. It is important that the hose clips are placed at the extremities of the motor housing to prevent distortion of the body. For the top bearing of the mast use a saddle clip with a quick release gate to facilitate easy assembly of the mast and array.

POINTS TO NOTE

1. Short booms and low weight are paramount for smooth and reliable operation.
2. Small diameter elements in the antenna have high Q, narrow bandwidth, light weight and low wind load.
3. Care in the alignment of shafts and bearings is essential.
4. The "excess" portions of the castings should not be removed without prior thought, as they can be made to fit snugly around the mast.
5. Heavy duty wire is needed for the motor supply feed.
6. Thorough lubrication and waterproofing will reap dividends.
7. The calibration should be checked carefully before finally mounting! ●

NEW CALL SIGNS

MARCH-APRIL 1972

VK2AM—M. J. Farrell, 4 Carlotta St., Greenwich, 2061.
VK2AX—A. W. Stowar, 7A Melbourne Rd., Lindfield East, 2070.
VK2BR—B. F. Darragh, 749 Forest Rd., Peakhurst, 2210.
VK2LE—St. George Amateur Radio Club, Civil Defence Hq., The Mall, Hurstville, 2221.
VK2BFW—E. G. Webster, 26 Arthur St., Homebush, 2240.
VK2BGT -G. L. Tillett, 9 Naomi Pl., Baulkham Hills, 2152.
VK2BNF—E. Smith, 8 Everton Rd., Belrose, 2085.
VK2BNG—G. Mattesich, 54 Lake Heights Rd., Lake Heights, 2502.
VK2BOR—Oxley Region Radio Club, 5 Condon Ave., Port Macquarie, 2444.
VK2BZV—B. V. Vlcex, 5 Birch St., Batlow, 2730.
VK2ZCC—C. J. Bourke, 7/266 Pennant Hills Rd., Carlingford, 2118.
VK2ZVS—A. J. Skewes, 61 Regent St., Junee, 2593.
VK2ZVT—K. S. A. Gormley, 115 Morpeth Rd., East Maitland, 2323.
VK2ZZO—R. D. Parker, 48 George St., Avalon Beach, 2107.
VK3DJ—D. G. G. Johns, 26 Porter St., Eltham, 3095.
VK3HT—I. B. Williamson, 20 Rosamond Cres., East Doncaster, 3109.
VK3LX—W. D. Moulton, 41 Railway Pde., Murrumbeena, 3163.
VK3MY—L. D. Money, 14 Blamey St., East Bentleigh, 3165.
VK3ZY—S. King, 1 Kalmai Ave., Mt. Waverley, 3149.
VK3AIP—E. F. Coate, 18/27A Domain Rd., South Yarra, 3141.
VK3ASN -K. J. Assender, 24/67 Moonya Rd., Murrumbeena, 3163.
VK3AZJ—J. J. Lilley, 11 Yarra Gr., Hawthorn, 3122.
VK3AZZ—R. J. Gray, 7 Fenwick Crt., Bundoora, 3083.
VK3BGE—I. H. Watson, 26 Lee-Anne Cres., Bundoora, 3083.
VK3BGF—C. L. Nichols, 162 Spring St., Reservoir, 3073.
VK3BGG—R. E. Snell, "The Pines," Locarno Ave., Kallista, 3791.
VK3CCB—G. J. Bradshaw, 27 Crown St., Glen Waverley, 3150.
VK3CDC—R. Chamberlain, 8 Bristow Dr., Nunawading, 3131.
VK3CEC—C. A. Cantor, 1/38 Park St., Hawthorn, 3122.
VK3CIF—P. B. Dodd, 10 Cannes Gr., Beaumaris, 3193.
VK3YDF -D. J. Furst, 19 Vernal Ave., Mitcham, 3132.
VK3YGW—G. Targownik, 282 Doncaster Rd., North Balwyn, 3104.
VK3ZDX J. McEwen, 1703 Malvern Rd., Glen Iris, 3146.
VK3ZLT—G. J. Clements, 12 Whitty St., Sunshine, 3020.
VK3ZOF W. E. Metzenthen, 132 Suffolk Rd., Maidstone, 3012.
VK3ZTI—N. J. Melford, Old Coonara Rd., Olinda, 3788.
VK4BS A. H. Braby, Barnehurst St., Tarragindi, 4121.
VK4MI—L. Morrison, 18 Eleanor Ave., Springwood, 4127.
VK4UV—L. E. Martin, Station: Cr. Quentin & Jasen Sts., Cleveland, 4163; Postal: P.O. Box 94, Cleveland, 4163.
VK5IN—K. V. Hanson, 5 Foley St., Salisbury Downs, 5108.
VK5YK—M. J. Dodd, 127 Stephen Tce., Walkerville, 5081.
VK5ZDC—R. W. Parker, 55 Sixth Ave., Ascot Park, 5043.
VK6DZ—D. J. Reitze, 6 Jeffries St., Albany, 6330.
VK6IM—I. A. Broughton, 28 Alexander Rd., East Fremantle, 6158.
VK6IQ—G. C. F. Hufner, Station: "Mareeba," Albany H'way, Arthur River; Postal: P.O. Box 21, Wagin, 6315.
VK6KE—R. Kovacic, Tropicana Motel, Broome, 6725.
VK6KM—K. M. Moore, Station: Lot 10, Boundary Rd., Albany, 6330; Postal: C/o. D.E. P.M.G. Dept., Albany, 6330.
VK6NE—N. R. Penfold, 388 Huntriss Rd., Woodlands, 6018.
VK6TD—T. Graham, Block 8, Flat 35, Korbosky Rd., Lockridge, 6054.
VK6YB—T. Ballantyne, 7/60-64 Forrest Ave., Eastside Gardens, East Perth, 6000.
VK6ZHY—C. T. Younger, Station: U.S. Naval Base, Exmouth, 6707; Postal: Navcommsta Holt, P.O. Box 26, Exmouth, 6707.
VK6ZKW W. H. Knubley, 24 Traylen Rd., Kalamunda, 6076.
VK7HW—H. H. E. Westerhof, Station: 312 Nelson Rd., Mt. Nelson, 7007; Postal: P.O. Box 49, Sandy Bay, 7005.
VK7SS—P. R. Tompson, 1/21 Seymour St., St., New Town, 7008.
VK7ZAZ—W. J. Howse, 5 Haig St., Lenah Valley, 7008.
VK7ZMF M. J. Fox, 13 Granville Ave., Lindisfarne, 7015.
VK9JC—B. J. Clary, P.O. Box 3, Ukarumpa, E.H.D., N.G.
VK9JD R. Davis, P.O. Box 2087, Konedobu, P.
VK9MH M. S. Hodgson, P.O. Box 2234, Konedobu, P.
VK9MI—A. McIsaac, P.O. Box 80, Rabaul, N.G.

LICENSED AMATEURS IN VK

MARCH-APRIL, 1972

	Full	Lim.	Total	
VK0	6	1	7	
VK1	92	28	120	
VK2	1387	529	1916	
VK3	1320	674	1994	
VK4	522	208	730	
VK5	514	215	729	
VK6	362	135	497	
VK7	154	67	221	
VK8	35	12	47	
VK9	89	14	103	
	4481	1883	6364	Grand Total

World wide DX Reception is *EASIER* Now...

FINE TUNING & an "S" METER **are Standard,**

Built-in Features

in the EC10 Mk II

Eddystone **COMMUNICATION RECEIVER**

- 550 kHz to 30 MHz — "S" Meter
- 9" Straight line Dial for Easy Tuning
- 5 Bands (1 Med. & 4 Short Wave)
- Fine Tuning Control
- World-Wide DX Reception
- PRICE $200.00 plus Sales Tax

For FREE Technical Literature MAIL this COUPON TODAY

Available from Wholesalers or Australian Agents

R.H. Cunningham PTY. LTD.

VIC.: Cnr. Dryburgh & Victoria Sts., West Melbourne. 329-9633
N.S.W.: 64 Alfred St., Milsons Point 2061. 929 8066
W.A.: 65 Balcombe Way, Balga, Perth 6061. 49-4919.
QLD.: L. E. BOUGHEN & CO., 30 Grimes St., Auchenflower 4066. 70-8097
S.A.: ARTHUR H. HALL PTY. LTD., 1-3 The Parade West, Kent Town 5067. 63-4506

TELEX: Melb. 31447, Sydney 21707

Name _____

Address _____

_____

EC10 Mk. II. A.R.8/72

CONTESTS

With Peter Brown,* VK4PJ

VK/ZL 1971

Although I was only a participant in the 1971 VK/ZL Contest, I consider that I should refer to this Contest. This is our only international Contest, but one would be forgiven for thinking that we were not interested. VK4 Division easily had the best representation and if other Divisions had participated in similar proportions to their membership, the showing would have been reasonable.

Let us face it, as a nation we should be able to run at least one international Amateur Contest or else we derate ourselves to an insignificant part of the Amateur Radio world.

This Contest depends on VK/ZL operators and the rest of the world will soon lose interest if there are few host operators.

The 1972 Contest comes up in October. Make sure that your Division, and your country, provides good representation. Don't rely on your entry only. Get at least two others to support you!

CERTIFICATES

I have not been entirely satisfied with the penwork on certificates issued by me during 1971/72. However, a good friend of the Institute has provided a good "pen" for Certificates, so if you would like a new Certificate just WRITE me so that I can anticipate demand, and I will advise you when to return your Certificate for replacement.

VK0MX's R.D. Contest Certificate was returned through the post . . . ???

R.D. CONTEST—THE FRIENDLY CONTEST

By now you will have digested, I hope, the 1972 Remembrance Day Contest rules. I am trying to please you and to make the Contest better. So when you return your log please give me an indication of your feelings. If satisfied, just place a big okay somewhere on the front sheet. If you have new ideas, I would like to hear them!

Don't forget! Make sure that everyone you contact enjoys the Contest . . . and make sure that your Division wins.

DIVISIONAL TROPHY WINNERS, REMEMBRANCE DAY CONTEST

1948—New South Wales	1960—Tasmania
1949—Tasmania	1961—Western Australia
1950—Tasmania	1962—Western Australia
1951—Tasmania	1963—Queensland
1952—Western Australia	1964—South Australia
1953—Western Australia	1965—South Australia
1954—South Australia	1966—Western Australia
1955—South Australia	1967—Victoria
1956—Western Australia	1968—Tasmania
1957—Western Australia	1969—Tasmania
1958—Western Australia	1970—Queensland
1959—Tasmania	1971—Queensland

1972 ?

CONTEST CALENDAR

Remembrance Day Contest—August 12-13, 1972.
VK/ZL Phone—October 7-8, 1972.
VK/ZL CW October 15, 1972.
Ross Hull VHF-UHF—Dec. 9, '72, to Jan. 21, '73.
J. Moyle Nat. Field Day—February 10-11, '73.

* Federal Contest Manager, Box 638, G.P.O., Brisbane, Qld., 4001.

Wireless Institute of Australia

Victorian Division

A.O.C.P. THEORY CLASS

commences

MONDAY, 21st AUG., 1972

Theory is held on Monday evenings from 8 to 10 p.m.

Persons desirous of being enrolled should communicate with Secretary, W.I.A., Victorian Division, P.O. Box 36, East Melbourne, Vic., 3002.

(Phone 41-3535, 10 a.m. to 3 p.m.)

1972 VK-ZL-OCEANIC DX CONTEST RULES

N.Z.A.R.T. and W.I.A., the National Amateur Radio Associations in New Zealand and Australia, invite world-wide participation in this year's VK-ZL-Oceania DX Contest.

Objects: For the world to contact VK-ZL-Oceania stations and vice versa.

When? Phone 24 hours from 1000 GMT on Saturday, 7th October, to 1000 GMT, Sunday, 8th October.

CW 24 hours from 1000 GMT on Saturday, 14th October, to 1000 GMT, Sunday, 15th October.

RULES

1. There shall be three main sections to the Contest—
   (a) Transmitting phone.
   (b) Transmitting c.w.
   (c) Receiving—"phone and c.w." combined.

2. The contest is open to all licensed transmitting stations in any part of the world. No prior entry need be made. Mobile marine and other non-land based stations **are permitted** to enter. Their "country status" will be determined by the country which issued the call sign used in the contest.

3. All Amateur frequency bands may be used but no crossband operation is permitted. **Note:** VK and ZL stations irrespective of their location **do not** contact each other for contest purposes **except** on 80 and 160 metres, on which bands contacts between VK and ZL stations are encouraged.

4. Phone will be used during the first week-end and c.w. during the second week-end. Stations entering both sections must submit separate logs.

5. Only one contact on c.w. and one contact on phone per band is permitted with any one station for scoring purpses.

6. Only one licensed Amateur is permitted to operate any one station under the owner's call sign. Should two or more operate any particular station, each will be considered a competitor and must submit a separate log under his own call sign. This is not applicable to overseas' competitors operating club stations.

7. Entrants must operate within the terms of their licences.

8. **Cyphers:** Before points can be claimed for a contact, serial numbers must be exchanged and **acknowledged**. The serial number of five or six figures will be made up of the RS (phone) or RST (c.w.) report plus three figures which may begin with any number between 001 and 100 for the first contact and which will increase in value by one for each successive contact. Example: If the number chosen for the first contact is 021, then the second must be 022 followed by 023, 024, etc. After reaching 999, restart from 001.

9. **Scoring:** (a) **For Oceania Stations other than VK-ZL:** 2 points for each contact on a specific band with VK-ZL stations; and 1 point for each contact on a specific band with the rest of the world.

(b) **For the Rest of the World other than VK-ZL:** 2 points for each contact on a specific band with VK-ZL stations; and 1 point for each contact on a specific band with Oceania stations other than VK-ZL.

(c) **For VK-ZL stations:** 5 points for each contact on a specific band, in addition, for each new country worked on that band, **bonus** points on the following scale will be added 1st contact, 50 points; 2nd contact, 40 pts.; 3rd contact, 30 pts.; 4th contact, 20 points; 5th contact, 10 pts.

Note: The A.R.R.L. Countries List will be used except that each **call area** of W/K, JA, and UA will count as "countries" for scoring purposes as indicated above.

(d) **80 Metre Section:** For 80 metre contacts between VK and ZL stations, each VK/ZL call area will be considered a "scoring area" with contact points and bonus points to be counted as for DX contacts. **N.B.**—Contacts between VK and ZL on **80 only.**

(e) **160 Metre Segment:** For 160 metres, contacts between VK-ZL, VK/VK, ZL/ZL and VK/ZL to the rest of the world. Each VK/ZL call area will be considered a "scoring area" with contact points and bonus points to be counted as for DX contacts (Rule 9c). **Note:** A contestant in a call area may claim points for contacts in the same call area for this 160 metre segment.

10. **Logs:**

(A) **Overseas Stations:** (a) Logs to show in this order—date, time in GMT, call sign of station contacted, band, serial number sent, serial number received, points claimed. **Underline** each new VK/ZL call area contacted. Separate log must be submitted for each band used.

(b) **Summary Sheet** to show call sign, name and address in BLOCK LETTERS; details of station; and, for **each band**, QSO points for that band; VK/ZL call areas worked on that band. "All band" score will be total QSO points multiplied by sum of VK/ZL call areas on all bands while "single band" scores will be that band QSO points multiplied by VK/ZL call areas worked on that band.

(B) **VK/ZL Stations:** (a) Logs must show in this order date, time in GMT, call sign of station worked, band, serial number sent, serial number received, contact points, bonus points. **Use separate log for each band.**

(b) **Summary Sheet** to show—name and address in BLOCK LETTERS, call sign, score for each band by adding contact and bonus points for that band, and "all band" score by adding the band scores together; details of station and power used; declaration that all rules and regulations have been observed.

11. The right is reserved to disqualify any entrant who, during the contest, has not strictly observed regulations or who has consistently departed from the accepted code of operating ethics.

12. The ruling of the Executive Council of N.Z.A.R.T. will be final.

13. **Awards:**

World-wide (except VK/ZL): (a) Attractive multi-colour certificates to the top scorers in each country. (Call area in W, JA, UA.) Separate Awards for phone and for c.w.

(b) Depending on reasonable degree of activity, separate certificates may be awarded for top scores on different bands.

(c) Where many logs are received, consideration will be given to awarding second and third place certificates.

VK/ZL Awards: Attractive multi-colour certificates—

1. To the top three scorers in each call area of VK and of ZL.
2. To the top three scorers on individual bands (160, 80, 40, 20, 15, 10) in VK and in ZL. Separate awards for phone and c.w.

14. **Entries from VK/ZL Stations** should be posted direct to -
N.Z.A.R.T. Contest Manager, ZL2GX,
152 Lytton Rd., Gisborne, New Zealand,
to arrive not later than **31st December, 1972.**
From **Overseas Stations** to the above address OR—
N.Z.A.R.T.,
Box 489, Wellington, New Zealand,
to arrive **not later than 25th January, 1973.**

S.W.L. SECTION

1. The rules are the same as for the transmitting section but it is open to all members of any S.w.l. Society in the world. No transmitting station is permitted to enter this section.

2. The contest times and logging of stations on each band per week-end are as for the transmitting section except that the same station may be logged twice on any one band—once on phone and once on c.w.

3. To count for points, the station heard must be in QSO exchanging cyphers in the VK/ZL/Oceania DX Contest and the following details noted: date, time in GMT, call of the station heard, call of the station he is working, RS(T) of the station heard, serial number **sent** by the station heard, band, points claimed.

4. Scoring is on the same basis as for the transmitting section and a summary sheet should be similarly set out.

5. Overseas stations may log **only VK/ZL** stations, but VK receiving stations may log overseas stations and ZL stations, while ZL receiving stations may log overseas stations and VK stations.

6. Awards will be made as listed in the section under "Awards".

—Jock White, ZL2GX,
Contest and Awards Manager, N.Z.A.R.T.

Hy-Q Electronics

CRYSTAL OSCILLATORS AND FREQUENCY MARKER KITS

for the Amateur and Professional

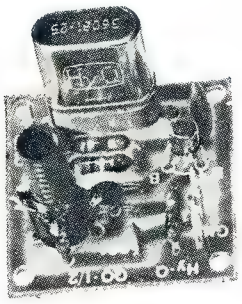

OSCILLATOR KITS

QO-1: 3 MHz. to 20 MHz.
QO-2: 20 MHz. to 60 MHz.

Input: 4V. to 9V. DC, 20 mA.
Output: 200 mV. on 50 ohms.

KIT LESS CRYSTAL: $6.60
including Sales Tax and Postage

20 ppm CRYSTALS if ordered with Kit:
Fundamental (QO-1) $4.50
3rd O/T (QO-2) $5.50
including Sales Tax and Postage

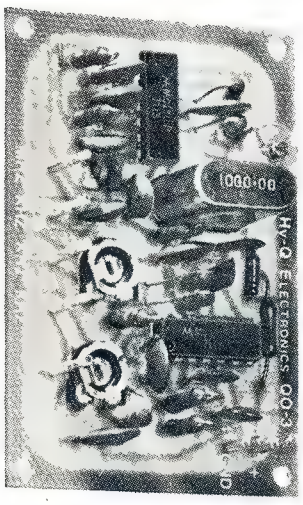

FREQUENCY MARKER KIT QO-3

Output: 1 MHz., 500 kHz., 100 kHz., 25 kHz. } 1V. P/P.

Input: 9V. DC, 25 mA.
Stability: Typically within 3 ppm.
Accuracy: Adjustable against WWV to within 1 ppm.

KIT INCL. CRYSTAL: $17.60
incl. Sales Tax and Postage

ASSEMBLED UNIT: $19.60
incl. Sales Tax and Postage

Hy-Q Electronics Pty. Ltd.

1-10-12 ROSELLA STREET (P.O. BOX 256), FRANKSTON, VICTORIA, 3199.
Telephone 783-9611. Area Code 03. Cables: Hyque Melbourne. Telex 31630.

N.S.W.: Hy-Q Electronics, 284 Victoria Avenue, Chatswood. Phone 419-2397.
QLD.: Dresser Aust. Pty. Ltd., Brisbane. Phone 79-1182.
W.A.: R.F. Systems, Perth. Phone 46-7173.
S.A.: General Equipments, Adelaide. Phone 63-4844.
TAS.: Video and Sound Service Co., Hobart. Phone 34-1180.
N.T.: Combined Electronics. Phone Darwin 6681.

AWARDS COLUMN

With Geoff Wilson,* VK3AMK

This month I would like to mention several things which should be observed when forwarding QSLs for checking, either when making an original application for an award or later additions to the total as extra QSLs are obtained.

1. Check to see that there are no duplications such as two cards from the same country but with different prefixes, e.g. a VK and AX.

2. Submit a check list of the cards in the same order as shown on the DXCC list and give essential details of each card as well, pack cards in the same order.

3. Use strong envelopes with adequate room for the QSLs. Often large numbers of cards are forced into a small envelope and when received have burst open in transit. If possible use only Post Office preferred sizes. Include with the cards a similar stamped and addressed envelope for their return. Cards will in future not be returned unless return postage is paid by the sender.

4. Clearly show sender's name and FULL postal address on back of article.

5. Do not use airmail envelopes for Australian internal mails unless the additional fee for airmail is paid.

6. Those having DXCC totals of less than 250 current countries confirmed would assist greatly if they forwarded cards in multiples of 25 at a time. Lesser numbers sent at a time greatly increases overall time spent in checking. Those having in excess of 250 current countries may send any number. If the above guidelines are followed not only will you speed the handling of your cards but by proper packing, etc., the chances of cards being lost in the mail are very slight.

GENERAL CERTIFICATION RULE

This term is now very common but still obviously not fully understood by many people. A number of awards state that GCR applies, this briefly means: Any officer of a recognised Amateur Radio Club or Society, any two licensed Amateurs at higher licence classes, or any CHCer may certify that they have sighted the applicant's QSLs for a particular award. The person applying for the award therefore retains his QSLs instead of forwarding them to the sponsor of the award, who in most cases will be in an overseas country. Despite the above, the sponsor of any award reserves the right to see the QSLs if any doubt exists.

WORKED ALL PACIFIC—"WAP"

Confirmations required from 30 Oceania "countries" as listed. No charge unless certificate is required by airmail. Different prefixes are acceptable as long as the countries are as listed below:

CR8/10—Port. Timor
DU—Philippines
FB8—Adelie Land
FK8—New Caledonia
FO8—Fr. Oceania
FW8—Wallis Is.
FU8/YJ—New Hebrid.
KB6—Baker, Howl'd
KC6—Carolines
KC6—Palau, etc.
KG6—Marianas
KG6I—Iwo Jima
KG6—Marcus
KH6—Hawaiian Is.
KJ6—Johnston Is.
KM6—Midway
KP6—Palmyra
KS6—Am. Samoa
KW6—Wake Is.
KX6—Marshall Is.
PK1, 2, 3—Java
PK4—Sumatra
PK5—Borneo
PK6—Celebes, etc.
JZ0—Nth. New Guin.
VK—Australia
VK2—Lord Howe Is.
VK4—Willis Is.
VK9—New Guinea
VK9—Papua
VK9—Norfolk Is.
VK9—Christmas Is.
VK9—Cocos Is.
VK0—Macquarie Is.
VR1—Gilbert Is.
VR1—Ellice Is.
VR1—Br. Phoenix Is.
VR2—Fiji
VR3—Fanning Is.
VR4—Solomon Is.
VR5—Tonga
VR6—Pitcairn
VS4—Sarawak
VS5—Brunei
ZC5—Brit. Nth. Born.
ZK1—Nth. Cook Is.
ZK1—Sth. Cook Is.
ZK2—Niue
ZL—New Zealand
ZL—Kermadec Is.
ZL—Chatham Is.
ZL—Campbell Is.
ZL5—N.Z. Antarctica
5W1—Samoa
ZM7—Tokelau Is.
VK9 (C2)—Nauru Is.

GCR lists OR QSLs to: ZL2GX, 152 Lytton Rd., Gisborne, New Zealand.

* 7 Norman Avenue, Frankston, Vic., 3199.

you and DX

With Don Grantley*

Times: GMT

The past two months have been rather hectic for me what with flitting around the countryside and such things, consequently many letters have remained unanswered to this date. My apologies for this, I will try and get them all done before I jump off to VK4 again. In the meantime I will appreciate any news you care to send along.

Conditions still much the same as in the past months, there are the good days when the unexpected will happen, such as the good DX openings on 40 metres, and the times when there is nothing doing. By and large, 20 mx is still the band to which we look for the most consistant performance, and although conditions are on the way down, there is still some very good DX to be located.

Hank VK2BHL from Dapto is one who has been amongst the DX and his list is really a DX man's dream come true. M1D, A35LT, IC1TRA, LX1DV, 9H1DG, IS1MUA, C31BC, EA-8GZ, OZ3MV, FO0RV, 9Y4VV, YA2ZL, DL6KB/OH0, FM7AA are just a few from a long list submitted by Hank. These lists, although not often published in their entirety, are a great help when compiling the notes and are appreciated by many of the other DX editors with whom I am in regular contact by tape.

On the subject of tape. This naturally enough is not a DX item, but is a subject related to Amateur Radio, as many of our operators use a tape medium to assist their overall operation. Have any of you noted the large number of faulty cassettes on the market? I use a top brand cassette recorder for much of my overseas contacting, and I am amazed at the number of cassettes on the market which become jammed and cause trouble with the recording. The particular items are not confined to one single brand. They bear all varieties of labels, but all have one thing in common, they are assembled from U.S.A. components in a foreign country. Not every one is faulty, but there is quite a large percentage which are useless, in fact they won't get through the first side. So the warning is, when buying cassettes for your recorder buy a reputable brand, and insist on a receipt from the retailer in case you should have to return them.

NEW AND STRANGE PREFIXES

JF1 is being used by Japan for stations in the Kanto area. 3G3AA was used for the World Telecom Day, all QSLs to go via the CE Bureau, Box 13630, Santiago, Chile. FO0 and FP0 were in operation around Tahiti, FO0RV being G5RV who wants the QSLs to his home QTH, while FP0VQ goes to manager W2NQ.

IZ1ISS was I1PFL from International Space Show, QSL Box 250, Torino, Italy. JY9 is being used by several stations. JY9GR is DL9GR, QRV until November, QSL to DK4PP or Box 1170, Amman. JY9EA goes to his SM5EAC QTH, and JY9VO goes to Box 5089, Amman, Jordan.

PT has been in use by Brasillia stations since April 19, and the QSL Bureau for that district is Box 07-0911, Brasillia-DF-700000, Brazil. PT2EYO is QRV 14180 daily s.s.b. 2100-2230z, and on 14050 c.w. at 0200 over the week-ends. His manager is WA1OKF/1, but this is listed in the current Call Book under his former novice call WN1OKF.

VT1LC is the only other special prefix which I have for the month, this was a special station operated by VE1ASJ from the Lions Club Car Show. Cards to Box 552, St. Johns, N.B., Canada.

SILENT KEYS

Two appear in the Geoff Watts DX News Sheet. WA6YVW, Bill Nesbit, who passed away on May 21, and I1ER, Mario Santangeli, on April 26. Mario was noted for his consistent encouragement to S.w.l's.

GENERAL NEWS

Venkat A51KV went QRT after only 880 QSOs due to the early onset of the monsoon season and the bad state of the dirt roads caused by heavy rain. He and his XYL returned to Calcutta but hopes to return to Thimpu later this year. Meantime he has repaired A51TY's rig and the latter is now reported on the air using a frequency around 14217 at 1425z. Reverting to A51KV again, if you worked him, his manager is W6KNH.

KC6SK, who was formerly KC6BK, is now active from Yap Is. in the West Carolines. He will be there for two years and uses all bands c.w./s.s.b. Stan has his old KC6BK logs, a few thousand QSLs with him and will be pleased to confirm any outstanding QSL. Send it to Stanley Kohn, Box 55, Colonia, Yap Is., West Carolines, 96943.

Some news from TY. TY1ABE is QRV from May to September 14130 s.s.b., and 14005 c.w. TY6ATE has an important change in QSL information, his cards should go to Ted Schultz, B.P. 107, Natitingou, Dahomey, and not to W4WHF as shown in the QSL manager's directory. Another frequently on the air is WB2AQC/TY3, his cards go to the home QTH.

Quite a pile of QSL information to hand for 5H stations, first of all the new calls of some former operators. 5H3HD is now 3D6AX; JJ now 5Z4JJ; KF is 9J2CS; KJ now LA6GF; MA is ET3DS; MB is WA2UYX. Some QSL managers are 5H3JL, QSL via W9NNC; 5H3JR, via W2SNM; 5H3LV, via VE3BIZ; and to abbreviate the 5H calls a little, LZ goes to G3LQP, ML via VE3ODX, MM via SM5CEU, 5H3MT to home QTH LA6PF, MV via VE7SE, NN via VE3CDX, whilst the following will go direct: 5H3FQ, Jock Greig, Box 168, Dar-es-Salaam; 5H3KA, Bob Ward, Box 939, Arusha; 5H3NO, Eric Japing, Box 20104, Dar-es-Salaam.

CURRENT ACTIVITY OF INTEREST

Here are a few stations of possible interest, together with times and frequencies where contacts have been made.

ET3JH 14235 s.s.b. Thurs. and Tues. 0330, 14205 s.s.b. Tues. at 1500 and 21335 Tues. and Sun. from 1700. QSL manager from May 1 this year is WB8ICV, prior to that cards should go to Box 2336, Addis Ababa.

FB8WW daily skeds from Crozet Is. QSL manager since start of this year is F6BFH, Alain Duchauchoy, 21 Rue de la Republique, F-76, Bihorel, France.

HB0XJL, 3527 c.w. at 1950z, QSL to DJ2BW. IM0BUP 14119 s.s.b. at 2030z, QSL to ISWL. UG6JJ QRV Tues. and Fri. 14332 s.s.b. at 0300z. VP1BH 14155 s.s.b. at 0642, manager is VE-2AKZ. VP8MX (Sth. Georgia) 14060 c.w. at 1330, manager is ZS1ACD. VS9MB has a sked Tues. and Fri. 21820 at 1700, QSL to G3KDB.

CR9AK sked 21235 at 1300z Tues. with manager CT1BH. KC6SX from Truk in East Carolines usually on 14 s.s.b. at around 1800z. QSL to his KH6HIF QTH.

PJ8WP 14024 at 0500, also on 7 and 21, manager W5KGJ. LA8YB/4W on 14210 at 0100z, manager is LA3BI.

Several stations have been heard and worked from the 7X area. 7X0GM, who is Michel F2GM, and XYL Annick 7X0GA are active on the twenty and fifteen metre bands using s.s.b., and ask for their QSLs to go via the 7X Bureau. It is to be noted that they used the 7Y prefix for July. Also active from there is 7X0JG, who is Jan OK1VJG, active from 0800-0900 most days on 14 s.s.b. He will be there for two years and wants cards to be sent through the OK Bureau.

It is noted that the ZL stations are again using the ZM prefix to Feb. 2, 1974, and it is hoped it gives the N.Z.A.R.T. the boost it did last time they used ZM.

QSL INFORMATION

Cards for the following stations should be sent to the International DX Association, Box 125, Simpsonville MD, 21150, U.S.A.: TY7ATF, AP2KS, ZK1AJ, EP2CC, KP6AL, VE8CB, K4QOS/KB6, FR7AE/E, ZK2AH, ST2SA, XT-2AA, VK0TM, FY7AF, ZM7AG, ZK1MA, VK-9NP, 8Z4A. Cards for the following should go to DOTM, Box 7388, Newark, N.J., 07107: CN8HD, CR5SP, CX2CO, DJ0VB, FM7WQ, HK0AI, HU1IE, JW1EE, KF4SJ, KV4FZ, LA1H, OY7ML, PJ7VL, PY2PA, PY2PE, VA2UN, VE8RCS, VK3BM, V3CIF, VK9JK, VK9XI, VK9XK, VP7NY, VP8JV, VP9GR, VS6DO, VK9XX, VS6DR, W4EXI, W9OLJ, XE1IIJ and 9Y4VT.

POSTSCRIPT

B.A.R.T.G. 1972 RTTY Contest results show two VKs in the list. VK2KM came 12th with 109384 points, and VK6PG lower in the list with 43848 points. The contest was won by I5MPK, scoring 209902 points from 163 contacts in 36 countries, on all bands 3.5 to 28 metres.

Alf Matthews, VK3ZT, in relation to the Mellish Reef DX-pedition organised by John Martin: VK9JW, last month asks that QSLs be forwarded direct to VK3JW and not through QSL Bureau.

* P.O. Box 222, Penrith, N.S.W., 2750.

Ionospheric Predictions

With Bruce Bathols, VK3ASE **AUG. '72**

Listed below are predictions compiled from chart series "P" issued by the I.P.S. for Aug. 1972. The figures represent the predicted time when the circuit between the points listed should be open for at least 50% of the month. A single time only indicates that a sharp peak for the MUF is predicted in the chart and the circuit could open at that time for a short period. A single time togetner with a plus or minus number indicates a gradual rising in the MUF to the peak and then a gradual decline. The circuit should be open for the period plus or minus the number of hours from the peak. Two times hyphenated show a sharp increase and decrease of the MUF curve with the circuit being open between both times. All times stated are E.A.S.T.

VK4 is Townsville. VK0 is Macquarie Island. SP and LP are short and long paths respectively.

28 MHz.—

VK4 to KH6			1100-1400
VK6 ,, ZS			1800

21 MHz.—

VK1/2 to 8P	SP	0700-1600
,, ,, ,,	LP	minus 1 0900 plus 2
,, ,, W6		0600-1600
,, ,, VK0		minus 4 1300 plus 4
,, ,, 5Z	SP	0900
		minus 1 1700 plus 2
,, ,, 5Z	LP	minus 1 0700 plus 1
		1700
,, ,, ZS		minus 1 1700
,, ,, VU		minus 1 1200 plus 1
VK3 ,, UA		minus 5 1800 plus 1
,, ,, G	SP	minus 4 1900
	LP	0800
,, ,, I	SP	1500-2000
	LP	0700, 1700
VK4 ,, KH6		0700-2100
VK5 ,, JA		0800-1900
VK6 ,, W1		1000
,, ,, ZS		1500-2100

14 MHz.—

VK1/2 to ZL		0600-1900
,, ,, 8P	SP	0600-2200
	LP	0700-1200
,, ,, VE3	SP	1200-1500, 2200-0200
	LP	0800-1400
,, ,, W6		1200-0300
,, ,, PY		0700-1700, 2000
,, ,, VK6		minus 2 0900 plus 9
,, ,, 5Z	SP	0800-1900
	LP	1200-2000
,, ,, ZS		minus 3 1700 plus 6
,, ,, VU		1900-0500, 0700-1200
VK3 ,, VK8		minus 2 1000 plus 9
,, ,, UA		1900-0500, 0700-1200
,, ,, G	SP	2000-0500, 0700-1100
	LP	0600-1400, 1600-2100
VK4 ,, KH6		1300-0200
		0600 plus 1
VK5 ,, KH6		1300-0400, 0600
,, ,, JA		1600-0400, 0700-1100
VK6 ,, W1		2100-0500, 0800
,, ,, ZS		1400-2400
,, ,, G	SP	2200-0600, 0900-1400
	LP	0800-1300, 1600-2300

7 MHz.—

VK1/2 to 8P	SP	1600-2100
,, ,, VE3	SP	1600-2200
	LP	0800
,, ,, W6		1700-0100
,, ,, PY		0700, 1600-2000
,, ,, VK0		1600-0700
,, ,, VK6		1800-0900
,, ,, VU		2200-0800
VK3 ,, VK8		1800-0900
,, ,, UA		0100-0800
,, ,, G	SP	0300-0800
	LP	1600 plus 1
VK4/5 to KH6		1700-0300
VK5 ,, JA		1900-0700
VK6 ,, W1		minus 1 2000 plus 1
,, ,, ZS		0000-1000

Smoothed monthly sunspot numbers predictions for Auugst 54, Sept. 52, Oct. 49, Nov. 47.

—Swiss Fed. Observ., Zurich.

Letters to the Editor

Any opinion expressed under this heading is the individual opinion of the writer and does not necessarily coincide with that of the Publishers.

ATTENUATION MARKER

Editor "A.R.," Dear Sir,

Allow me to reply to the postscript to the Attenuation Marker, "A.R.," June 1972. The excuse given for inadvertently publishing that article is given as (i.) criticism, (ii.) confusion at the time of change in the "A.R." The article in question was posted on 30th June, 1971, and published April 1972. It was passed for publication by the old and the new Publishing Committee and by the Manager. What actually did stir things up was the advent of the dreaded word Laser which was uttered in April 1972 in defiance of the policy of "Let sleeping dogs lie" which had been in operation since the laser articles of Jan. and Feb. 1965.

It has come now as a rude shock to find already in our libraries a 1971 laser text book that gives a "home brew" CO2 laser that can be constructed out of odds and ends and with a few dollars. The performance of this laser is given as "capable of burning a hole in a plank of wood or a sheet of asbestos or iron." This excellent book describes the CO2 laser as being the most powerful and dangerous of all the laser family. In addition, at a wavelength of 10μ or 10.6μ at which it lases, it is quite invisible.

Now compare that output (measured in tens of watts and with pulses—tens of thousands, and more, of watts) with the milliwatt output of "safe" gas lasers. My own radiation burns with "safe" gas types got a bit mixed up when described by the Technical Editor, but were still enough to give me a cautious approach to these things.

On the question of being invisible at 10μ, the book indicates that conventional methods of detection have not been developed, being not sensitive enough and being very expensive. I suggest that 1965 type critics update their reading to the 1971 level and that W.I.A. officials sort out criticisms (in this case) into two categories, (1) those with the necessary qualifications, (2) those due to hostility whose "corns I have trodden on" in advocating greater experimental activity.

Let me pay tribute to the old Publishing Committee who gave all experimenters a very fair go. In the present situation we desperately need detectors at 10μ before inexperienced builders succeed in constructing these CO2 lasers (in my opinion there are a few snags involved that are not mentioned).

I do not know of any other Radio Amateur that works on detectors in the 10μ to the optical region, but they will profit by my own experience and keep very quiet about it. In any case, they will have understood the method quoted of increasing the sensitivity of the tube and the method of detecting the change-over to the excited state. I have spent three years on this project with a few promising results.

To fit myself for this type of work, I have copious notes taken from over 20 laser text books.

Personally, I would consider it very bad manners to publicly criticise anybody especially if I had no knowledge of that particular subject.

While the publication of that specialised knowledge was being apologised for that same knowledge was being used to fish out the latest laser text book and locate, at a very early stage, a great laser danger to our very inexperienced community. In America, according to the literature, several firms have been supplying laser outfits to the high schools for several years.

In Australia, in some sections, we don't look at lasers. We "stick our heads in the sand". That policy won't work now.

The dangerous CO2 laser is available as a "home-brew". Details are right here on our bookshelves. It is the W.I.A's responsibility now. Not mine.

—A. J. C. Thompson, VK4AT.

[The "excuse" for publishing "An Attenuation Marker", i.e. confusion at the time of "A.R." management change, is correct, timescale notwithstanding. When the article was accepted the position of Technical Editor was vacant, and the article was not subjected to the detailed assessment which would now apply. Criticism, by readers, after the article was published, was one reason why the second article was not published in full. In no way was this criticism due to the choice of subject, but purely to the difficulty many readers had in understanding VK4AT's lengthy and rather disorganised presentation. If the description of his radiation burns in the published postscript "got a bit mixed up" this was due to the same cause. The Publications Committee agrees fully that more should be published in Australia on the techniques and hazards of laser experiments, and welcomes contributions on the subject.—W. M. Rice, VK3ABP, Technical Editor.]

AUTHOR NOW KNOWN

Editor "A.R.," Dear Sir,

In the last issue of "A.R." you published a poem "Coming Round the Bend". I was disappointed to read underneath "Author Unknown".

I spent many years in the Sydney G.P.O. operating room with the author who was Frank Spruhan, who wrote many small humorous poems over the name of Spru.

Frank retired from the operating room at the age of 65 and died at Wyong, N.S.W., at the age of 81 in 1964.

He was a colourful character—world war one soldier, marine operator on W.W.1 troopships, railway telegraphist, newspaper telegraphist, goldminer in W.A., etc., etc., and P.M.G. telegraphist.

—Bill Bullivant, VK2BC.

[We also received interesting and informative letters about "Spru" from Ray Jones, VK3RJ, and Ivan Brown, VK2RY. The latter included part of a collection of Spru's poems and prose jottings and mentioned that he could be contacted on a "CTO" net on Sunday mornings at 1000 hours E.A.S.T. 7130 MHz. s.s.b. Ed.]

TARIFFS AND IMPORTS

Editor "A.R.," Dear Sir,

Thank you for the opportunity to read the concise statement of logic written by Jim Goding, QSP June "Amateur Radio". His square look at a very round subject could be an example for others to follow.

While it can be argued that the subject of tariffs and imports into Australia is a complicated one, a realistic attitude toward incentives to local industry and good service to the consumer, should be taken. Those who are required to appraise and use equipment from the world market have seen the era of "buy British" and more recently "buy Australian made". Fair enough; but surely patriotism goes only so far and the reality of present day prices and technical advances in electronics call for something more on both sides of the producer/consumer scene. Here again the issue is complicated by sectional interest and frequently, rightly so.

There is always a case for the other fellow's point of view, but let us not lose sight of the fact that Amateurs and other non-professionals who look with envy at the magazine advertisements, have a right to some of the good service that consumers normally expect.

Page iii. of June "A.R." makes interesting reading, both in picture and print, and provides much to think about.

—Dick Heighway, VK3ABK.

Overseas Mag. Abstracts

With Syd Clark, VK3ASC

"QST"—April 1972

Double Standards (freq. stds. for h.f. and v.h.f.); Phased Verticals for 40; The Line Sampler (reflectometer type v.h.f. power monitor and u.h.f. using "flowline" components); a 10-Element Yagi for 220 MHz.; a Super-Simple 80-20 Receiver; Thermal Design of Transistor Circuits; an Audio Synthesiser (crystal controlled r.t.t.y. tone generator); VFO/Xtal Controlled Gate/Grid Dipper; High Performance Tunable FM Receiver; Strip-Line Kilowatt Amplifier for 432 MHz.; Fundamental Raser Principles (April Special); Oh, Math, Where is thy Sting?; Co-ax and Indicator-Cable Supports for Beam Antennas.

"HAM RADIO"—April 1972

Two Metre FM Transmitter; Low Distortion Two-Tone Oscillator for SSB Testing; Frequency Measuring Oscillator; Emitter Tuned Pre-Amplifier for 21 MHz.; Tuning Toroidal Inductors; Nostalgia with a Vengeance (a blonde, a kw. and a memory); Improved Selectivity for Direct Conversion Receivers; Digital Station Accessory; Audio-Actuated In-Line Squelch (he Squelcher); Beam Antenna Headings.

S.S.T.V. SPECIFICATIONS

Draft proposed s.s.t.v. specifications prepared by J. Wilson, VK3LM/T, were published on page 4 of January "A.R." A further set of draft specifications have now been received from John Wilson and these are published below for information. As this new draft has been forwarded by the Executive to the V.h.f. Advisory Committee for consideration, it is requested that comments thereon should be submitted to that Committee.

DRAFT S.S.T.V. SPECIFICATIONS

Australia—Not to exceed the band width of d.s.b., 6 kHz.

1. S.s.b. normal bandwidth, 3 kHz.
2. S.s.t.v., 2.3 kHz.
3. Tone, 1,500 Hz.p.s.
   (a) Shifted between 1,200 Hz. for sync. information.
   (b) Modulated upwards 2,300 Hz. for picture information;
   Examples: 1,500 Hz.p.s. black level.
   2,300 Hz.p.s. white level.
   Tones in between, shades of grey.
   5 m.s. burst of 1,200 Hz.p.s. equals horizontal sync.
   30 ms. burst of 1,200 Hz.p.s. equals vertical sync.
4. Horizontal sweep rate for—
   60 Hz.p.s. supply equals 15 Hz.p.s.
   50 Hz.p.s. supply equals 16.66 Hz.p.s.
5. Vertical sweep rate for—
   60 Hz.p.s. supply equals 8 secs.
   50 Hz.p.s. supply equals 7.2 secs.
6. Resulant resolution of 120 lines per frame.
7. Picture size approx. 4¼ inches square, format 1:1.
8. Direction of scan (50, 60 Hz.p.s. supply)—
   Horizontal, left to right.
   Vertical, top to bottom.

Above as per International and Australian.

S.S.T.V. INTERNATIONAL (NET) FREQUENCIES

(VK Amateurs should note that the 80 and 40 metre frequencies are outside the Australian frequency allocations and thus cannot be used for transmitting purposes.)

80 Metres — 3845 kHz.
40 Metres — 7200 kHz.
20 Metres — 14230 kHz.

Other frequencies are in use from time to time on 21 and 28 MHz.

SUGGESTED AUSTRALIAN (NET) FREQUENCIES (calling only)

160 Metres — 1840 kHz.
80 Metres — 3650 kHz.
40 Metres — 7125 or 7130 kHz.
20 Metres — 14.230 MHz. (International)
15 Metres — 21.360 or 21.340 MHz. (Internat'nal)
10 Metres — 28.660 MHz. (International)
6 Metres — 52.6 MHz.
2 Metres — 144.675 MHz.

☆

DIVISIONAL NOTES

SOUTH AUSTRALIA

There is no firm reply from the Thebarton Council about our proposed headquarters, but signs are definitely encouraging.

The South-Eastern Radio Group Convention held at Mt. Gambier last June long week-end, turned out very well. The Adelaide and other visitors thoroughly enjoyed themselves at the new style gathering. The Saturday evening Cabaret was voted an overwhelming success, and on the more technical side, there were challenges aplenty in the Sunday programme of scrambles, hidden transmitter hunts, fox hunts and meanderings. Tales of woe about the deviousness of hiding antennas inside fake P.M.G. marker poles amused us all.

A reminder about the Remembrance Day Contest this month. Let us have as many scores as possible. —Dave VK5GZ.

☆

AROUND THE TRADE

Hy-Q Electronics Pty. Ltd. announces that Mr. T. A. Dineen, their Marketing Director, has left on an extensive tour of South-East Asia. This tour coincides with the opening of the Company's Singapore facility, Hy-Q Electronics International Pty. Ltd.

VHF UHF

an expanding world

With Eric Jamieson, VK5LP*

Closing date for copy: 30th of month.
Times: E.A.S.T.

AMATEUR BAND BEACONS

VK0	53.100	VK0MA, Mawson.
	53.200	VK0GR, Casey.
VK3	144.700	VK3VE, Vermont.
	144.925	VK3ZQC/EZ, Moe South.
VK4	52.400	VK4WI/2, Townsville.
	144.390	VK4WI/R1, Toowoomba.
VK5	53.000	VK5VF, Mt. Lofty.
	144.300	VK5VF, Mt. Lofty.
VK6	52.006	VK6VF, Bickley.
	52.900	VK6TS, Carnarvon.
	52.950	VK6VE, Mt. Barker.
	144.500	VK6VE, Albany.
	145.000	VK6VF, Bickley.
VK7	144.900	VK7VF, Devonport.
VK8	52.200	VK8VF, Darwin.
ZL1	145.100	ZL1VHF, Auckland.
ZL2	145.200	ZL2VHF, Wellington.
	145.250	ZL2VHP, Palmerston North.
	431.850	ZL2VHP, Palmerston North.
ZL3	145.300	ZL3VHF, Christchurch.
ZL4	145.400	ZL4VHF, Dunedin.
JA	52.500	JA1IGY, Japan.
HL	50.100	HL9WI, South Korea.

Some good news comes via Mike VK2AM to the effect that by August it is hoped to have a 6 metre beacon operating from Sydney with the call sign VK2WI, using m.c.w. on 52.450 MHz. Soon after it is anticipated the 2 metre beacon will also be operating, no frequency details at this time. Coupled with the information that VK1VF in Canberra only awaits a licence to operate on 144.475 MHz., we are now in the position, or should be in 1972, to have Australia-wide coverage via beacons, particularly on 2 metres, and nothing but good must eventually come from this situation. When the Band Planning Committee has duly deliberated and made recommendations we should see the frequencies of operation of the various beacons in some semblance of order.

SIX METRES

Not much to report this month. Wally VK5ZWW is keeping regular skeds with Joe VK7ZGJ on 52.052 MHz. on Sundays at 0900, mainly using forward scatter, but some meteor pings. Mostly 5 to 6 seconds contact periods, sometimes up to 1 minute. Wally believes results could be better if Joe could use other than gated screen modulation.

Note with interest that YJ8BD in the New Hebrides will be looking for VK contacts on 52 MHz. s.s.b. from September 1972. Distance will be approx. single hop to Brisbane and double hop to VK5, a little further than the usual ZL signals, so something may be possible during the next DX season. It might be possible before then to obtain some information regarding operating frequency, times, etc., and let you know.

TWO METRES

Kerry VK5SU at Ceduna is building a 2 metre transmitter using QQE06/40 in the final to replace present QRP rig, and should be ready for next DX season.

After the big burst on 21st May, 2 metres has gone a bit quiet although openings between VK3 and VK5 eventuated on 4th, 14th and 15th June. While on the 2 metre scene, have I heard correctly that no 2 metre beacon is likely to eventuate from Launceston due to local opposition? And after what happened on 21st May!!!

GENERAL NEWS

It is hoped v.h.f. operators in general will try and do some extra operating to support the efforts of the VK2 V.h.f. and T.v. Group in sponsoring a v.h.f./u.h.f. contest from 4th to 20th August, similar in detail to that arranged by David VK8AU last year.

On 1296, Ron VK3AKC is testing his final using a pair of 3CPX100A5s to that beautifully constructed dish at Geelong. It is to be hoped the work Ron is about to undertake with 1296 MHz. e.m.e. will not be marred by the radar from Tullamarine Airport which is very prominent at his location. Also noted that Ray VK3ATN has his 16th foot dish up 43 feet and fitted with 1296 MHz. feed, and awaits a special 2 dB. transistor pre-amplifier from the States.

While on moonbounce, Lyle VK2ALU reports briefly on the activities of the Dapto group, who are in the process of trying to arrange an e.m.e. sked for about 1000 GMT on 15th July with OZ7UNI in Denmark, using 432 MHz. The latter have a 20 foot dish with 22 dB. gain, 1 kw. input and receiver with 1.5 dB. noise figure. The proposed date will allow about one hour for the attempt.

The South-East Radio Group Convention at Mt. Gambier went off very well over the holiday week-end, 10th and 11th June, about 52 Amateurs being in attendance. A good programme of events kept all interested, with plenty of time to natter. The small band of workers at Mt. Gambier are certainly doing their best to provide something new each time; it was rather a pity that the bus tour for the ladies was not better patronised, but it does seem most are content to follow father in the car during the fox hunts and transmitter hunts. The most successful competitor was Darrell VK3AQR, and best piece of home-constructed equipment went to Ron VK3AKC for his 1296 MHz. final.

Congratulations to the Geelong Hamfest which went off very smoothly, and with 110 registrations must surely have rewarded the efforts of the organisers, who had sufficient prizes to say that the odds of winning an event or door prize were about two to one! Best piece of home-constructed gear prize went to VK3TN.

As a result of some of my stirrings of recent months, two letters have come to hand. The first is from Kevin VK3VK and he comments on my remarks in June "A.R." regarding v.h.f. participation in contests. His thoughts are presented to set you thinking. Briefly, they are: "Of recent years, R.D. rules have been altered to accommodate v.h.f. operators. This only helps—in the main part—operators in metropolitan areas. Originally the R.D. was for interstate contacts, not intrastate. Any changes for v.h.f. participation should have been in the form of a separate section.

"A separate section for v.h.f. in the National Field Day may help interest and also prevent what is happening under present rules, i.e. stations aiming for a good score must be located near a capital city. I feel that contests which were originally intended as h.f. contests should not be spoiled by altering the rules to suit v.h.f. ops., who, for the most part, as indicated in your column, are not very interested in these contests. Separate sections or contests to satisfy v.h.f. ops. would also probably encourage operation if they feel their opponents in a contact are also limited to v.h.f. bands."

There you have it. Thanks Kevin for going to the trouble of writing, I only hope more will be stirred to action by your thoughts, whether they agree or not.

The other letter comes from Bill VK4XZ in Townsville with suggestions for allocating 52.400 to 52.500 for exclusive beacon operation, with the capital city beacons 10 kHz. apart and others in between at 2.5 kHz. intervals as required. He lists advantages of only 100 kHz. to tune, thereby more suitable for panadaptors to sweep, and by frequency readout one could tell the State the band was open too at that time. Bill suggests the proposed 100 kHz. segment as suitable due to little use. Only comment I would add here at this stage is that this area (52.4 to 52.5 MHz.) does get pretty busy during a good DX opening, especially in the southern States. However, over to you.

DX CONDITIONS

With the forthcoming VK2 Contest in August and other winter activity on v.h.f., there are no doubt some operators looking for DX contacts who are somewhat at a loss to know what effect weather may have on such DX, particularly on 2 metres. Mick VK5ZDR was probably one of the first to use the weather years ago to further his long distance 144 MHz. contacts and it seems an opportune time to present a short discourse from the pages of the "Victorian VHF-er" which is very relevant at this moment ,and sums up the situation in plain language. Study a weather map in conjunction with the article.

"An anti-cyclonic belt with cell centres over southern Western Australia and Victoria would have temperature inversions in the vicinity of these centres. The pressure situation which recently existed should produce a relatively long period of atmospheric stability in our area and hence prolonged conditions conducive to the formation of temperature inversions. The rate of decrease of temperature with altitude is known as lapse rate. When temperature rises with altitude, the lapse rate is negative, and the condition is known as an inversion. These temperature inversions are not uncommon in the troposphere but are generally restricted to shallow layers.

"At night, the Earth's surface cools by radiation, and if this cooling proceeds long enough, the air near the ground becomes colder than the air above it and what is known as "surface inversion" forms. With calm or nearly calm wind conditions, as in the centre of a 'high', air spreads upwards through a comparatively small height and the surface temperature can be quite low, thus with an appreciably higher temperature in the air layer above the ground a marked inversion should exist. On clear calm nights surface temperatures can fall considerably, giving rise to fogs and frosts in winter, which are characteristic (along with smog in some large cities) of inversion contions. However, as we move away from the centres of these anti-cyclones, the wind speed increases, causing atmospheric turbulance which mixes the air layers and thus disperses the temperature inversions."

The above gives an outline of what is involved in such inversions. I would add the following points for the uninitiated: Get on the air early and be prepared to stay around for several hours if necessary if some weak stations indicate promise. Call at intervals, if everyone listens no contacts eventuate. Tune with b.f.o. on, and tune slowly. When you make a contact, keep it brief, others will be waiting. Finally, another pointer to an inversion is smoke. If smoke from a chimney or a factory rises quite high into the air, straight up, and spreads out at a certain height under calm conditions, then you can be pretty sure an inversion exists. One last point, inversions seem to frequently stay near the coast, areas perhaps 10 to 20 miles inland and further just cannot participate in DX created by some inversions. I know, I live 25-30 miles from the shore-line, and many times have had to sit out hours of listening to the boys in Adelaide working DX!!

That's all for this month. News has been scarce mainly because I have been away for three weeks on holidays to sunny Coff's Harbour. Thought for the month: "The unforgiving man assumes a judgment that not even the theologians have given to God."

—The Voice in the Hills.

* Forreston, South Australia, 5233.

"20 YEARS AGO"

With Ron Fisher, VK3OM

AUGUST 1952

I wonder how many readers can remember the "Rothman System of Modulation". John Clarke, VK2DZ, described it in the August 1952 issue of "Amateur Radio". It was a modified form of screen modulation and employed demodulated r.f. feedback to the screen of the modulated stage. This was designed to prevent "efficiency modulation" by providing a substantially constant r.f. angle of plate current flow which was maintained during the modulation cycle.

Many advantages were claimed for the system over normal plate and screen modulation, including elimination of the modulation transformer. However, I don't remember many people using it at the time, but it might be worth some of the 160 metre boys looking at it for portable use.

An all-band tank circuit was described by R. S. Choate, VK6RK. He used the idea of tuning two bands with the one L/C combination, the condenser being large enough to cover two adjacent bands. VK6RK stated that the L/C ratio was not optimum for phone, but that in practice it worked out well. Of course band switching and multi-band transmtiters were rare in 1952 and those that were, often used odd methods to achieve the result.

J. A. Gazard, VK5JG, dealt out some thoughts on "Sunspots and DX". 1952 was getting near the low point of the cycle, so I guess the DX men needed a little condolence. On the same subject I notice that Ray Jones, in his Federal QSL Bureau notes, stated that June 1952 was a post-war low in QSLs and was probably a reflex of the poor conditions on the international DX bands.

The August Editorial of twenty years ago reflected on some of the reasons behind the Remembrance Day Contest, and suggested that "we participate if only for half an hour as a mark of respect". That reminds me, there is another one coming up in a couple of weeks and I have to get an antenna fixed up.

KEY SECTION

With Deane Blackman,* VK3TX

The Key Section is pleased to announce that it intends to revive the President's Cup. This Cup was first awarded to the Section in 1931 by the Federal President of the W.I.A. Unlike membership of the (present) Key Section, which is awarded for consistent communicating by c.w., the President's Cup is intended to be for prowess in c.w. operating. This is not an easy quality to measure, and the proposal is that the award be based on performance in the four principal VK Contests as follows:

1. The President's Cup will be awarded annually by the Key Section of the W.I.A.
2. All VK Amateurs are eligible, however no one person may be awarded the Cup for more than three years in succession.
3. The current holder may keep the Cup, though it remains the property of the W.I.A. at all times.
4. The award will be offered by the Key Section, and it will not be necessary to apply.
5. The award for any year will be based on the results of the Ross Hull Contest concluding at the beginning of that year and the John Moyle National Field Day Contest, the Remembrance Day Contest, and the VK/ZL Contest of that year, as published in "Amateur Radio" magazine. In each case the points will be taken from entrants in the CW-Only Section or Sections of these Contests.
6. The total points for any operator will be found from: (Ross Hull points x 100) plus (N.F.D. points x 80) plus (R.D. points x 40) plus VK/ZL points.

The factors in the formula are based on scores over the past five years (except for the Ross Hull, for which there are no data) and are intended to give roughly equal weight to each Contest—you just cannot score 25,000 in the N.F.D.

The award will commence with this year's Ross Hull, and be first made about this time in 1974.

*129 Clayton Rd., Clayton, Vic., 3168.

Experienced Electronic Technician

FOR SERVICING AND INSTALLATION OF GRAPHIC ARTS EQUIPMENT

(particularly Plate Making and Litho Camera equipment)

For appointment PHONE MR. ADAMS (Melbourne) 347-1246

BRIGHT STAR CRYSTALS

FOR ACCURACY, STABILITY, ACTIVITY AND OUTPUT

COMMERCIAL CRYSTALS

IN HC6U HOLDER, 0.005% TOLERANCE, FREQUENCY RANGE 6 TO 15 MHz.

$6.00 plus Sales Tax and Postage

WRITE FOR LIST OF OTHER TOLERANCES AND FREQUENCIES AVAILABLE

COMPREHENSIVE PRICE LIST NOW AVAILABLE

New Zealand Representatives: Messrs. Carrell & Carrell, Box 2102, Auckland

Contractors to Federal and State Government Departments

BRIGHT STAR CRYSTALS PTY. LTD.

LOT 6, EILEEN ROAD, CLAYTON, VIC., 3168 Phone 546-5076

With the co-operation of our overseas associates our crystal manufacturing methods are the latest

SILENT KEY

It is with deep regret that we record the passing of—

VK2LM—L. M. Wilson

HAMADS

- **A free service for individual members.**
- **Four lines of print free (200 characters/spaces); full charge at $6 (min.) per col. inch if exceeded or for repeats: includes name/address—use QTHR if correct in Call Book.**
- **Copy, please in typescript if possible, and signed.**
- **Excludes commercial-class advertising.**
- **Exceptions only by PRIOR arrangement.**

For full details see January 1972 "A.R.." page 23.

FOR SALE

Melbourne, Vic.: Pye Reporter Mk. II., excellent condition, converted to 6 mx net, 3 crystals, $25. PSU 240v. AC to 670v., 200 mA., DC, $20. Transformer 800v. CT, 200 mA., 3 htr. windings, $8. VK3ZDF, QTHR, Ph. (03) 541-3495.

Kalamunda, W.A.: Yaesu FR100B Receiver in perfect condx, $200 o.n.o. VK6HE, QTHR, Ph. (092) 93-2160.

Ashfield, N.S.W.: BC221AA Freq. Meter, best offer. A. J. Van Genderen, 15 John St., Ashfield, N.S.W.

Melbourne, Vic.: Type 3 Mk. 2, $50 for this well-loved antique. Two VFOs at $5. Bob Boase, VK3NI, QTHR. Ph. (03) 347-7491.

Sydney, N.S.W.: 3 el. full size 10 mx Beam, all aluminium construction, as new, $12. VK2BDN, QTHR, Ph. (02) 747-5149.

Sydney, N.S.W.: Collins 75S3-A Receiver, Serial No. 10090, in good working order, looks new. VK2AYT, QTHR. Ph. (02) 95-3381.

Doncaster, Vic.: Eddystone 840C Receiver, mint condition, $140.00. J. Godfrey, 2 Tiffany Crt., Doncaster. Ph. (03) 848-5079 (A.H.), 662-1825 (bus.).

Carrum, Vic.: 5 Element 20 Metre wide spaced Beam, interlaced 4 el. 15 metre separate feed. Good condition, $100. R. Flanagan, VK3CR, 51 Valetta St., Carrum, Vic., 3197. Ph. (03) 772-4039.

Melbourne, Vic.: Heathkit SB101 Trcvr., SB600 Spkr., HP23E p.s. Complete with SB200 kw. linear, cables, mike, etc. $750. VK3OM, QTHR. Ph. (03) 560-9215.

Melbourne, Vic.: Base Station T.C.A. 1674, a.m., 6/40 p.a., 6/40 modulator, 60w. out on 8 metres, $55. Pye 9 MHz. Crystal Filter, $25. VK3YAZ, QTHR. Ph. (03) 25-2689.

WANTED

Melbourne, Vic.: Buy "Radio Constructor," June 1966 or photostat article from same. Can anyone help? VK3AQ, QTHR, Ph. (03) 288-2326.

Newport, Vic.: Coil Boxes for RU19 TRF Rx. VK3AIJ, QTHR. Ph. (03) 391-6025.

Canberra, A.C.T.: Single issues or whole years of "Amateur Radio Aug. 1959; Jan., Apr., 1961; Jan., 1962; "Wireless World," Oct. 1964; Dec. 1965 and May 1967. VK1VP, QTHR.

Croydon, Vic.: One only AR22R Control Box, preferably U/S. VK3AYY, Ph. (03) 725-8770 (A.H.).

Maroubra, N.S.W.: Receiver R1155, prefer mint unmodified. Also Admiralty type "Brass Pounder" Morse Key. Details, price. VK2NL, QTHR. Ph. (02) 34-6903.

Armidale, N.S.W.: For Police Boys' Radio Club. A.R.R.L. and similar Handbooks, also components (especially 10-415 pF. tuning capacitors) for Y.R.C.S. projects. VK2BLA, QTHR.

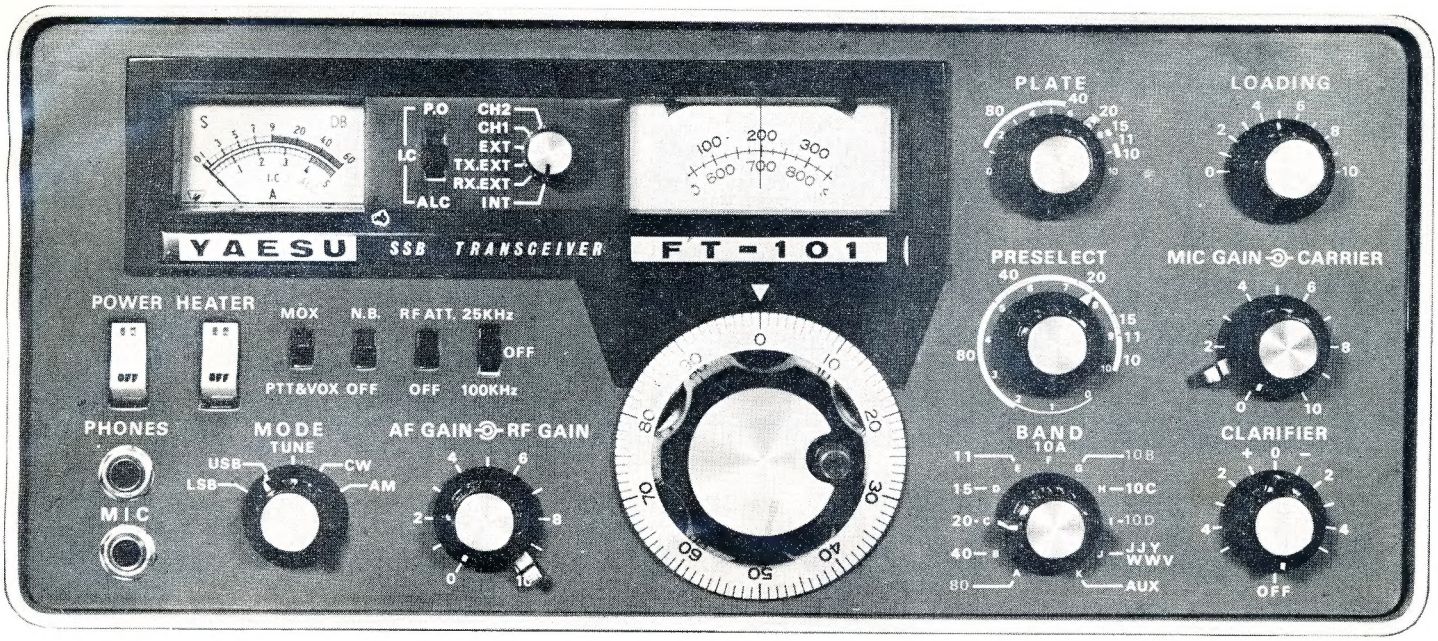

SOLID-STATE BREAK THROUGH *from YAESU*

FT-101 Dual Power Supply TRANSCEIVER

New Model with 160 Metre Band and Latest Modifications

FEATURE CHECK LIST

- Built-in AC and DC power supplies
- Built-in WWV 10 MHz. band
- Noise Blanker
- 25 and 100 KHz. Calibrators
- Built-in VOX
- ±5 KHz. Clarifier
- Break-in CW with Side Tone
- 1 KHz. Dial Read Out
- Selectable SSB
- AM Capability
- Built-in Speaker
- Microphone
- Dual VFO Adaptor
- Crystal Channel Oscillator

ACCESSORIES (optional extras)

External VFO .... Model FV-101
External Speaker .. .. Model SP-101
Mobile Mounting Bracket
CW Filter (600 Hz.)
160 metre Crystal

SPECIFICATIONS

Maximum Input Power: 300W. speech peak SSB, 180W. CW, 80W. AM.
Sensitivity: 0.3 microvolt for 10 dB. S/N.
Selectivity: 2.4 KHz. (6 dB. down), 4.2 KHz. (60 dB. down).
CW Filter: 0.6 KHz. (6 dB. down), 1.2 KHz. (60 dB. down).
Frequency Range: 1.8 to 2, 3.5 to 4, 7 to 7.5, 10 to 10.5, 14 to 14.5, 21 to 21.5, 27 to 27.5, 28 to 30 MHz.

GENERAL

Frequency Stability: Less than 100 Hz. drift in any 30-minute period.
Antenna Impedance: 50 to 100 ohms-SWR 2:1 or less.
Audio Output: 3 watts, 350-2200 Hz., 4 ohms impedance.
Devices and Tubes: 10 FETs, 3 IC, 31 Si Tr, 38 Si Diodes,
One 12BY7A driver, two 6JS6A final amp.
Power Source: 12 volts DC, or 100, 117, 200, 220, 234 volts AC.
Power Consumption: AC: Receive 0.5A., Transmit 3A.
DC: Receive 0.5A., Standby 5A., Transmit 20A. max.
Dimensions: 13½" wide, 6" high, 11½" deep.
Weight: 30 pounds.

All sets are pre-sales checked for operation on all bands, and covered by our 90-day warranty. Full facilities are available for after-sales service.

New Model with 160 metre band (less crystal), **$720.00** incl. S.T. Standard Model (not incl. 160 mx), **$680.00** incl. S.T.
(Price and specifications subject to change.)

Sole Authorised Australian Agent:

BAIL ELECTRONIC SERVICES

60 SHANNON STREET, BOX HILL NORTH, VIC., 3129. Telephone 89-2213

N.S.W. Rep.: **STEPHEN KUHL, P.O. Box 56, Mascot, N.S.W., 2020.** Telephone Day 667-1650 (AH 371-5445)
South Aust. Rep.: **FARMERS RADIO PTY. LTD., 257 Angas St., Adelaide, S.A., 5000.** Telephone 23-1268
Western Aust. Rep.: **H. R. PRIDE, 26 Lockhart Street, Como, W.A., 6152.** Telephone 60-4379

radioparts PROPRIETARY LIMITED

CUSTOMER SERVICE

MULTIMETERS FOR AMATEURS

SPECIALS—CHECK THESE LOW PRICES

MODEL SK100: 100K O.P.V.
D.C. V.: 0.6, 3, 12, 60, 300, 600, 1200.
A.C. V.: 6, 30, 120, 300, 1,200.
D.C. mA.: 0.012, 0.3, 6, 60, 600, 12A.
OHMS: 1 Ω to 20 MΩ in 4 ranges.
SIZE: 7" x 5¼" x 2½".
PRICE: **$30.40** + 15% sales tax.

MODEL SK7: 4K O.P.V.
D.C. V.: 10, 50, 250, 1,000.
A.C. V.: 10, 50, 250, 500, 1,000.
D.C. mA.: 0.25, 10, 250.
OHMS: 10 Ω to 2 MΩ in 2 ranges.
SIZE: 4⅞" x 3½" x 1½".
PRICE: **$8.80** + 15% sales tax.

MODEL M303: 30K O.P.V.
D.C. V.: 0.6, 3, 12, 60, 300, 1,200.
A.C. V.: 6, 30, 120, 300, 1,200.
D.C. mA.: 0.06, 6, 60, 600.
OHMS: 2 Ω to 8 MΩ in 4 ranges.
SIZE: 5¾" x 3¾" x 2".
PRICE: **$17.50** + 15% sales tax.

MODEL SK120: 20K O.P.V.
D.C. V.: 0.6, 3, 12, 60, 300, 1,200.
A.C. V.: 6, 30, 120, 300, 1,200.
D.C. mA.: 0.06, 6, 60, 600.
OHMS: 2 Ω to 8 MΩ in 4 ranges.
SIZE: 5¾" x 3¾" x 1¾".
PRICE: **$14.50** + 15% sales tax.

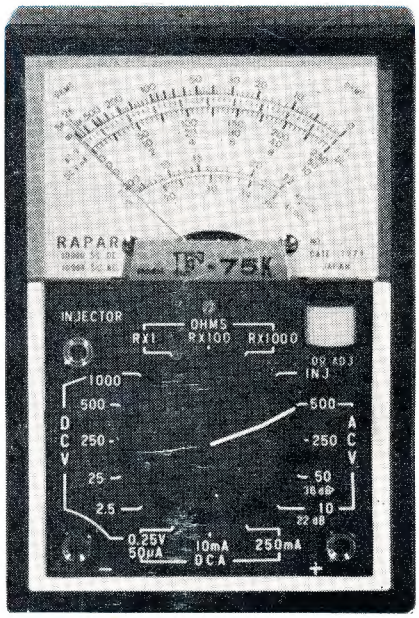

MODEL F75K: 30K O.P.V.
D.C. V.: 0.25, 2.5, 25, 250, 500, 1,000.
A.C. V.: 10, 50, 250, 500.
D.C. mA.: 0.05, 10, 250.
OHMS: 1 to 8 megohms in 3 ranges. Inbuilt Signal Injector.
PRICE: **$18.50** + 15% sales tax.

MODEL TP5SN: 20K O.P.V.
D.C. V.: 0.5, 5, 50, 250, 500, 1,000.
A.C. V.: 10, 50, 250, 500, 1,000.
D.C. mA.: 5, 50, 500.
OHMS: 0.5 MΩ in 4 ranges.
PRICE: **$15.00** + 15% sales tax.

MODEL 500B: 30K O.P.V.
D.C. V.: 0.25, 1, 2.5, 10, 25, 100, 250, 500, 1,000.
A.C. V.: 2.5, 10, 25, 100, 250, 500, 1,000.
D.C. mA.: 0.05, 5, 50, 500; 12A.
OHMS: 1 Ω to 8 MΩ in 3 ranges.
PRICE: **$25.00** + 15% sales tax.

MODEL MVA5: 20K O.P.V.
D.C. V.: 5, 25, 50, 250, 500, 2,500.
A.C. V.: 10, 50, 100, 500, 1,000.
D.C. mA.: 2.5, 250.
OHMS: 1-6 MΩ in 2 ranges.
SIZE: 4½" x 3¼" x 1⅛".
PRICE: **$12.00** + 15% sales tax.

MODEL TS-60R: 1K O.P.V.
D.C. V.: 15, 150, 1,000.
A.C. V.: 15, 150, 1,000.
D.C. mA.: 1, 150.
OHMS: 1K to 100K.
SIZE: 2¼" x 1¼" x 3½".
PRICE: **$6.75** + 15% sales tax.

SPECIAL CLEARANCE of "MASTER" and "PATON" High Quality PANEL METERS at SPECIAL PRICES.

Write for "THIS MONTH'S SPECIALS" Components Price List!

radio parts GROUP

562 Spencer St., W. Melbourne, Vic., 3003. Ph. 329-7888, Orders 30-2224
City Depot: 157 Elizabeth Street, Melbourne, Vic., 3000. Phone 67-2699
Southern Depot: 1103 Dandenong Rd., E. Malvern, Vic., 3145. Ph. 211-6921

OPEN 8 A.M. SATURDAY MORNINGS!